Quality People. Building Solutions.

Comfort Systems USA (Arkansas), Inc.
P.O. Box 16620
Little Rock, AR 72231
Phone 501-834-3320
Fax 501-834-5416

Date: 9/26/25
Return Request: 10/17/25
Project: Bentonville WRRF
Supplier: Powers of Arkansas
Manufacturer: Cook
Submittal: FEF Fans
Submittal Number: 15500-06 **Spec Section:** HVAC **Drawing #:** Mechanical

ENGINEER
Hawkins Weir

GENERAL CONTRACTOR
Crossland Heavy Contractors

ENGINEER
Black and Veatch

MECHANICAL SUBCONTRACTOR
Comfort Systems USA (Arkansas), Inc.
116 Commercial Ave
Lowell, AR 72745
479-770-8992

Notes:

CSUSA PROJECT NO.
25-5027
jzuber@comfortar.com

4806 Rixey Road
No. Little Rock, AR 72117

M-15500-004-A

CREATING CUSTOMERS FOR LIFE

POWERS

IOM

PRODUCT	FEF Fume Exhaust Fans
SPECIFICATION	15500.C.16, pg.16
MANUFACTURER	Loren Cook
JOB NAME	Bentonville Water Res Recovery Facility Impvts #2021037
LOCATION	Bentonville, AR
ENGINEER	Hawkins Weir
CONTRACTOR	Knight & Wilson
DATE	9/20/2025
SUBMITTED BY	Chris Atwood
LEAD TIME	9 Weeks

5440 Northshore Drive - North Little Rock, Arkansas 72118 - Tel: 501.374.5420 Fax: 501.370.9298

This publication contains supplemental installation and maintenance instructions for Vari-Plume® and Laboratory Exhaust units:

- CPSLE
- QMXLE
- TCNHBLE
- CAVP
- QMXVP

Carefully read this publication and any supplemental documents prior to any installation or maintenance procedure.

Loren Cook Company's *Laboratory Exhaust* catalog / brochure, as well as the documents related to each unit (such as CPS), provide additional information describing the equipment, fan performance, available accessories, and specification data.

For additional safety information, refer to AMCA Publication 410-96, *Safety Practices for Users and Installers of Industrial and Commercial Fans*.

WARNING

Rotating Parts & Electrical Shock Hazard:

Disconnect electric power before working on unit.

Follow proper lockout / tagout procedures to ensure the unit cannot be energized while being installed or serviced.

A disconnect switch should be placed near the fan in order that the power can be swiftly cut off, in case of an emergency and in order that maintenance personnel are provided complete control of the power source.

Grounding is required. All field-installed wiring must be completed by qualified personnel. All field-installed wiring must comply with National Electric Code (NFPA 70) and all applicable local codes.

Failure to follow these instructions could result in death or serious injury.

Handling and Lifting

Always lift fan by lifting lugs. **NOTICE! Never lift unit by shaft, motor, housing, or nozzle.**

The units may be shipped in sections and each section should be lifted into place using the provided lifting lugs. If the unit is to be lifted assembled, lift the unit with lifting lugs attached to the fan housing using a spreader bar as required to ensure no damage is incurred on the nozzle assembly.

All Vari-Plume® and Laboratory Exhaust units are designed to be self-supporting, without the use of guy wire, when installed according to the instructions within this document. The roof curb must be securely installed prior to fan installation according to the curb manufacturer's recommendations.

Unit Assembly

If unit is shipped in sections, assemble unit starting at the lowest level moving up the assembly. Each section should have a pre-installed gasket that must be present to ensure proper sealing of unit. If the gasket is damaged or missing, caulk may be used to seal the sections by applying between the bolted sections. Once

WARNING

The attachment of roof mounted fans to the roof curb as well as the attachment of roof curbs to the building structure must exceed the structural requirements based on the environmental loading derived from the applicable building code for the site. The local code official may require variations from the recognized code based on local data. The licensed engineer of record will be responsible for prescribing the correct attachment based on construction materials, code requirements and environmental effects specific to the installation.

Failure to follow these instructions could result in death or serious injury.

Installation

The unit should be installed on a curb/base that is securely attached to the roof structure per contract documents and local codes. If the curb is provided by Loren Cook, the curb should be attached per the provided submittal document by welding to the roof structure.

For curb mounted assemblies, the unit should be securely fastened to the curb using minimum ¼" x ¾" sheet metal screws using pre-punched holes in the curb cap. If pre-punched holes are not provided, use a minimum of 2 screws per side and a maximum of 12" spacing.

Drain Connections

Loren Cook lab exhaust fans all have drains as standard construction features. These drains should be properly connected to a drainage system to ensure that the run off from the units is disposed of properly. The connection should include a trap system (Figure 5) that is sized adequately to not allow for air leakage under the system pressure. Dimension A and B should be double the total static pressure for the unit.

CPSLE

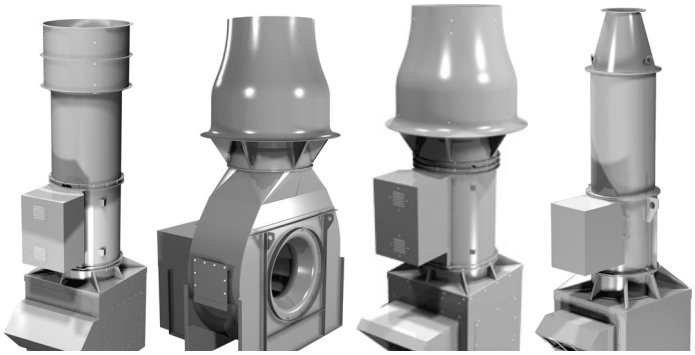

Typical Installations

QMXVP QMXLE, TCNHBLE

Typical installations for QMXVP, QMXLE, and TCNHBLE are shown below utilizing the Loren Cook LE curb. Figure 1 shows a unit without mixing box and an optional curb mounted isolation damper. The curb should be secured to the roof structure per project documents and then the isolation damper mounted in the curb as required. Ensure that the curb gasket is present and not damaged once the curb has been properly installed on the roof. Then the unit should be installed on the curb using the supplied mounting brackets and recommended fasteners.

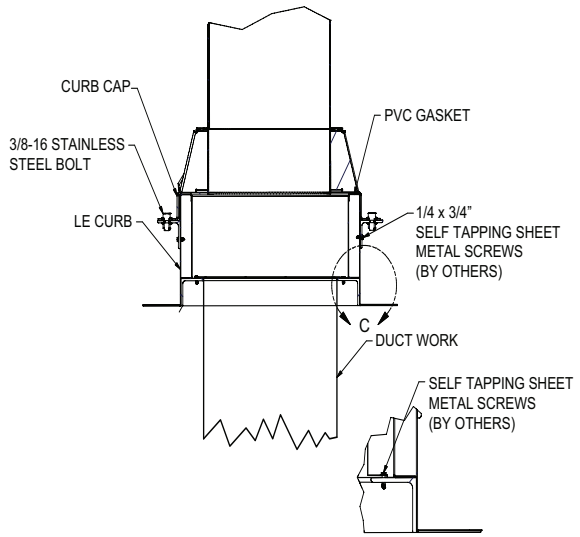

Figure 1 DETAIL C

Figure 2 shows a typical installation using a mixing box/ plenum and the Loren Cook LE curb. Similar to above the curb should be installed first per project documents and then the unit installed on the curb using recommended fasteners.

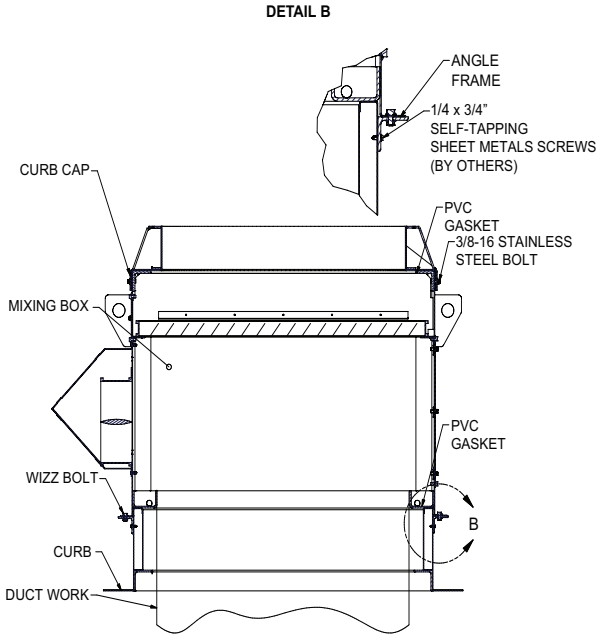

Figure 2

CPSLE

Figure 3 shows a typical CPSLE installation on a Cook RCG curb. The RCG curb should be securely mounted to the roof per project documents. Ensure that the curb gasket is in place once the curb has been installed on the roof. The unit should then be installed on the curb using the fasteners recommended in figure 3, Use a minimum of 2 screws per side and a maximum of 12" spacing.

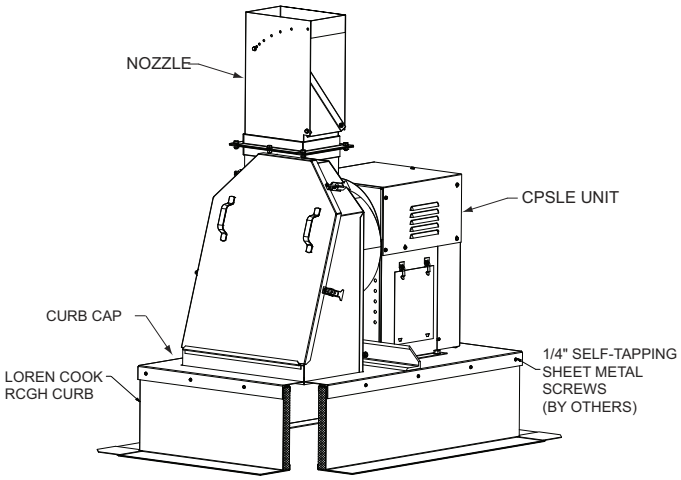

Figure 3

CAVP

A typical installation for a CAVP with mixing box is shown in figure 4. The CAVP unit is installed on either isolation rails or base as defined in the project documents. This unit is then installed on the roof using the correct vibration isolators per the isolator installation instructions. The mixing box is installed on a roof curb using the fasteners recommended in figure 4 and the roof curb should be mounted securely to the roof per the project documents. The final connection between the fan and mixing box is made using the supplied flex duct connector.

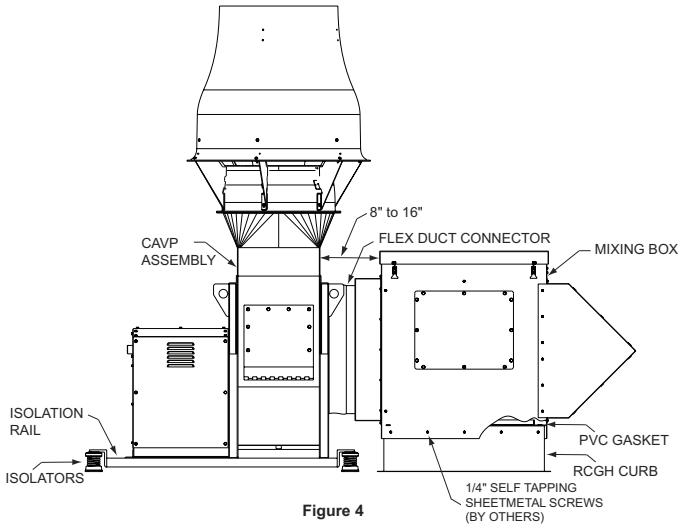

Figure 4

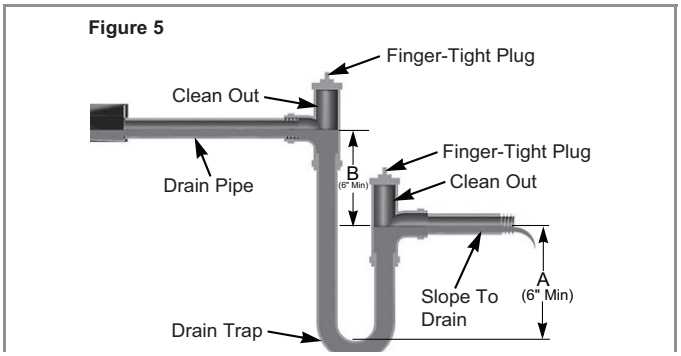

CPSLE Parts List

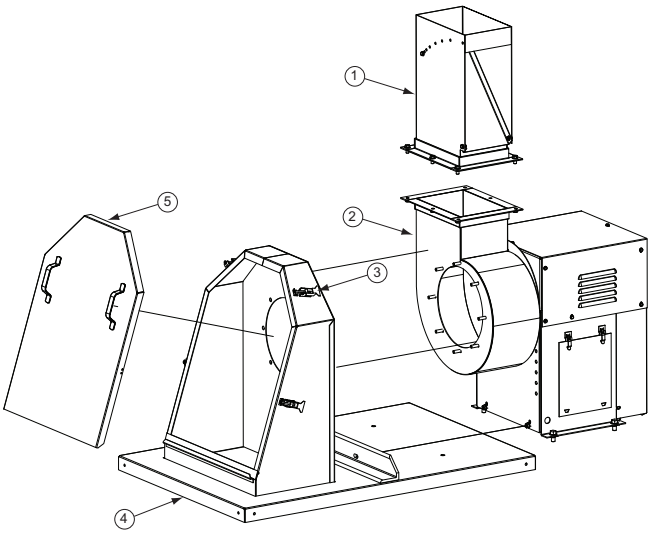

Parts Diagram Number	CPSLE
1	CPSLE Adjustable Nozzle
2	CPS Unit *(See CP IOM for details)*
3	Latches
4	Curb Cap and Low Loss Inlet Box
5	Inlet Box Door

CAVP Parts List

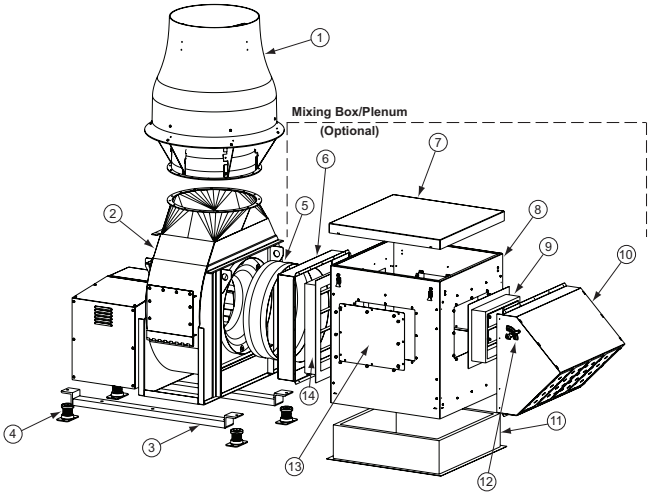

Parts Diagram Number	CAVP (*with Optional Mixing Box/Plenum)**
1	Vari-Plume® Nozzle
2	CA Unit *(See CA/CF/CP IOM for details)*
3	Isolation Rails (Optional)
4	Isolators (Optional)
5	*Flex-Duct Connector*
6	*Isolation Damper Cover*
7	*Mixing Box Lid*
8	*Mixing Box*
9	*Bypass Damper*
10	*Bypass Weatherhood*
11	*Curb (Optional)*
12	*Manual Bypass Handle*
13	*Mixing Box Access Door (2)*

QMXLE Parts List

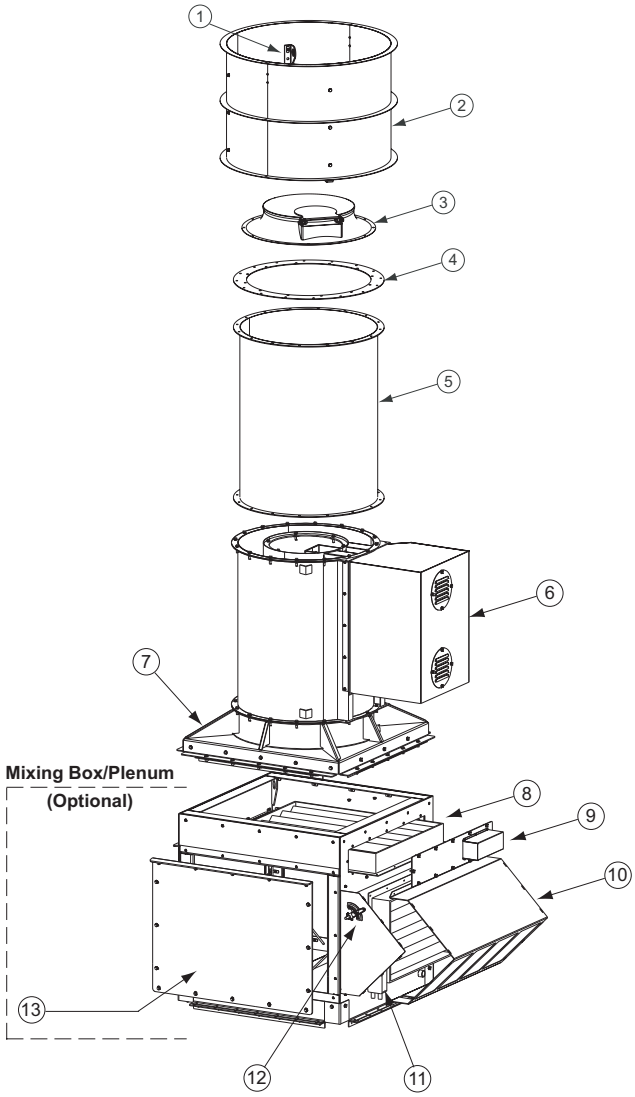

Parts Diagram Number	QMXLE *(with Optional Mixing Box/Plenum)**
1	Lifting Lug
2	Windband
3	Stack Damper
4	Adapter Plate
5	Middle Section
6	QMX Unit *(See QMX IOM for details)*
7	Curb Cap
8	*Isolation Damper (Optional)*
9	*Isolation Damper Cover*
10	*Bypass Weather Cover*
11	*Bypass Damper*
12	*Manual Bypass Handle*
13	*Mixing Box Access Door (3)*

Optional Mixing Box/Plenum - Parts 8 through 13.

QMXVP Parts List

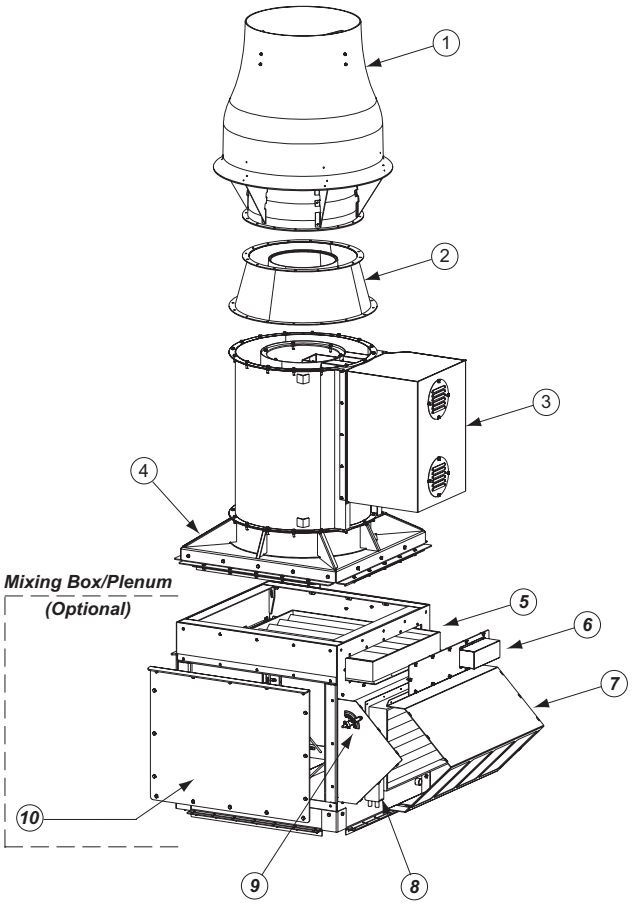

Parts Diagram Number	QMXVP (*with Optional Mixing Box/Plenum)**
1	Vari-Plume® Nozzle
2	Drain/Transition
3	QMX Unit *(See QMX IOM for details)*
4	Curb Cap
5	*Isolation Damper (Optional)*
6	*Isolation Damper Cover*
7	*Bypass Weather Cover*
8	*Bypass Damper*
9	*Manual Bypass Handle*
10	*Mixing Box Access Door (3)*

Optional Mixing Box/Plenum - Parts 5 through 10.

TCNHBLE Parts List

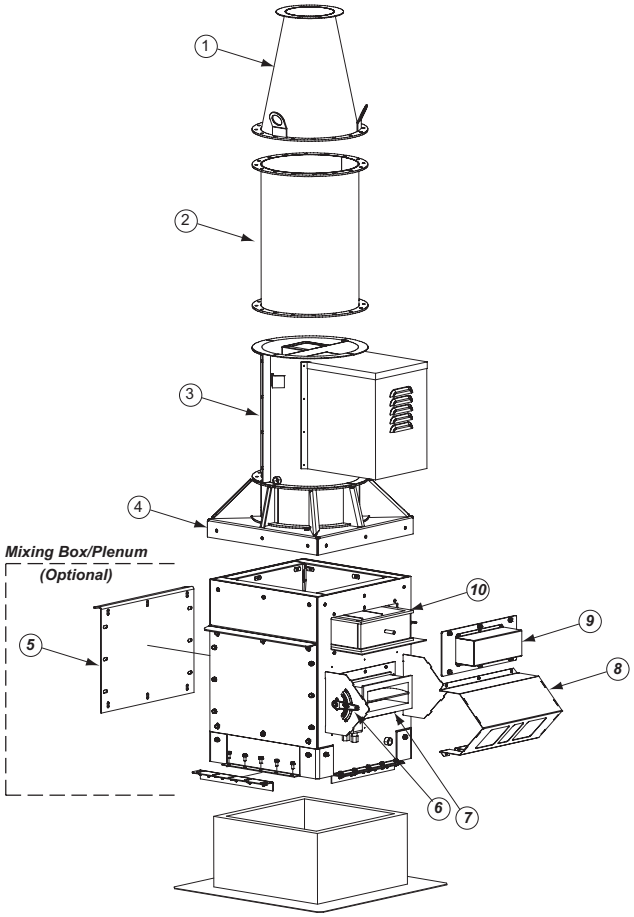

Parts Diagram Number	TCNHBLE (*with Optional Mixing Box/Plenum)**
1	TCNHBLE Nozzle Cone
2	Drum Extension
3	TCNHB Unit *(See TCN IOM for details)*
4	Curb Cap
5	*Plenum Access Door*
6	*Manual Bypass Handle*
7	*Bypass Damper*
8	*Bypass Weatherhood*
9	*Isolation Damper Cover*
10	*Isolation Damper (Optional)*

Optional Mixing Box/Plenum - Parts 5 through 10.

Limited Warranty

Loren Cook Company warrants that your Loren Cook fan was manufactured free of defects in materials and workmanship, to the extent stated herein. For a period of one (1) year after date of shipment, we will replace any parts found to be defective without charge, except for shipping costs which will be paid by you. This warranty is granted only to the original purchaser placing the fan in service. This warranty is void if the fan or any part thereof has been altered or modified from its original design or has been abused, misused, damaged or is in worn condition or if the fan has been used other than for the uses described in the company manual. This warranty does not cover defects resulting from normal wear and tear. To make a warranty claim, notify Loren Cook Company, General Offices, 2015 East Dale Street, Springfield, Missouri 65803-4637, explaining in writing, in detail, your complaint and referring to the specific model and serial numbers of your fan. Upon receipt by Loren Cook Company of your written complaint, you will be notified, within thirty (30) days of our receipt of your complaint, in writing, as to the manner in which your claim will be handled. If you are entitled to warranty relief, a warranty adjustment will be completed within sixty (60) business days of the receipt of your written complaint by Loren Cook Company. This warranty gives only the original purchaser placing the fan in service specifically the right. You may have other legal rights which vary from state to state.

LOREN COOK COMPANY

Corporate Offices: 2015 E. Dale Street Springfield, MO 65803 417.869.6474

lorencook.com