Quality People. Building Solutions.

Comfort Systems USA (Arkansas), Inc.
P.O. Box 16620
Little Rock, AR 72231
Phone 501-834-3320
Fax 501-834-5416

Date: 9/26/25
Return Request: 10/17/25
Project: Bentonville WRRF
Supplier: Powers of Arkansas
Manufacturer: Cook
Submittal: WF Fans
Submittal Number: 15500-06
Spec Section: HVAC
Drawing #: Mechanical

ENGINEER
Hawkins Weir

GENERAL CONTRACTOR
Crossland Heavy Contractors

ENGINEER
Black and Veatch

MECHANICAL SUBCONTRACTOR
Comfort Systems USA
(Arkansas), Inc.
116 Commercial Ave
Lowell, AR 72745
479-770-8992

Notes:

CSUSA PROJECT NO.
25-5027
jzuber@comfortar.com

4806 Rixey Road
No. Little Rock, AR 72117

M-15500-003-A

CREATING CUSTOMERS FOR LIFE

POWERS

IOM

PRODUCT	WF Wall Fans
SPECIFICATION	15500.C.15, pg.16
MANUFACTURER	Loren Cook
JOB NAME	Bentonville Water Res Recovery Facility Impvts #2021037
LOCATION	Bentonville, AR
ENGINEER	Hawkins Weir
CONTRACTOR	Knight & Wilson
DATE	9/20/2025
SUBMITTED BY	Chris Atwood
LEAD TIME	9 Weeks

5440 Northshore Drive - North Little Rock, Arkansas 72118 - Tel: 501.374.5420 Fax: 501.370.9298

This publication contains the installation, operation and maintenance instructions for standard units of the *AC & VCR: Centrifugal Roof and Wall Exhausters.*

Carefully read this publication and any supplemental documents prior to any installation or maintenance procedure.

Loren Cook catalogs, *AC* and *VCR,* provide additional information describing the equipment, fan performance, available accessories and specification data.

For additional safety information, refer to AMCA Publication 410-96, *Safety Practices for Users and Installers of Industrial and Commercial Fans*.

All of the publications listed above can be obtained from:

- lorencook.com
- *info@lorencook.com*
- 417-869-6474 ext. 166

For information and instructions on special equipment, contact Loren Cook Company at 417-869-6474.

Receiving and Inspection

Carefully inspect the fan and accessories for any damage and shortage immediately upon receipt of fan.

- Turn the wheel by hand to ensure it turns freely and does not bind
- Inspect dampers (if included) for free operation of all moving parts
- Record on the Delivery Receipt any visible sign of damage

Handling

Lift the fan by the lifting lugs provided under top cap. ***NOTICE! Never lift by the shaft, motor or housing.***

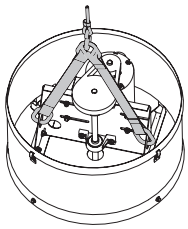

Lifting Lugs

Storage

If the fan is stored for any length of time prior to installation, completely fill the bearings with grease or moisture-inhibiting oil (refer to *Fan Bearings*, page 5). Store the fan in its original crate and protect it from dust, debris and weather.

- Cover the inlet, and outlet opening to prevent the accumulation of dirt and moisture in the housing
- Periodically rotate the wheel to keep a coating of grease on all internal bearing parts
- Periodically inspect the unit to prevent damaging conditions

⚠ WARNING

Rotating Parts & Electrical Shock Hazard:

Fans should be installed and serviced by qualified personnel only.

Disconnect electric power before working on unit (prior to removal of guards or entry into access doors).

Follow proper lockout/tagout procedures to ensure the unit cannot be energized while being installed or serviced.

A disconnect switch should be placed near the fan in order that the power can be swiftly cut off, in case of an emergency and in order that maintenance personnel are provided complete control of the power source.

Grounding is required. All field-installed wiring must be completed by qualified personnel. All field installed wiring must comply with National Electric Code (NFPA 70) and all applicable local codes.

Fans and blowers create pressure at the discharge and vacuum at the inlet. This may cause objects to get pulled into the unit and objects to be propelled rapidly from the discharge. The discharge should always be directed in a safe direction and inlets should not be left unguarded. Any object pulled into the inlet will become a projectile capable of causing serious injury or death.

When air is allowed to move through a non-powered fan, the impeller can rotate, which is referred to as windmilling. Windmilling will cause hazardous conditions due to unexpected rotation of components. Impellers should be blocked in position or air passages blocked to prevent draft when working on fans.

Friction and power loss inside rotating components will cause them to be a potential burn hazard. All components should be approached with caution and/or allowed to cool before contacting them for maintenance.

Under certain lighting conditions, rotating components may appear stationary. Components should be verified to be stationary in a safe manner, before they come into contact with personnel, tools or clothing.

Failure to follow these instructions could result in death or serious injury.

The attachment of roof mounted fans to the roof curb as well as the attachment of roof curbs to the building structure must exceed the structural requirements based on the environmental loading derived from the applicable building code for the site. The local code official may require variations from the recognized code based on local data. The licensed engineer of record will be responsible for prescribing the correct attachment based on construction materials, code requirements and environmental effects specific to the installation.

Installation

If the fan was delivered with the motor unmounted, see the maintenance sections for belt and pulley installation.

Wall Exhausters

If the fan is a wall mount unit and a grease terminator or grease trough was not purchased, a 1-1/16 inch diameter drain hole should be inserted on the bottom side of the unit for drainage.

If your fan is a wall exhauster with a round base, a mounting template is shipped with the fan. Use the template to locate the necessary lag screws or anchor bolts on the wall. The fan can then be lifted and attached easily. Secure with lag screws, anchor bolts, or other suitable fasteners.

VCR Installation

1. Ensure the fan discharge is a minimum 40 inches above the roof the roof surface and a minimum of 10 foot from any building air intake in order to comply with NFPA 96.
2. Minimum exhaust velocity in the duct should be 500 FPM in accordance with NFPA 96.
3. If the fan is installed on a surface that is not level, install the fan in a position that places the drain tube at the lowest position.
4. Secure the fan to the roof curb at all four corners using a minimum of four anchor bolts, lag screws or other suitable fastener.

Damper Installation

If your fan is supplied with dampers, follow the directions below.

1. Place the damper inside the curb or inside the duct work. Ensure the damper will open freely for the correct direction of the airflow.
2. Secure to curb at the damper shelf.
3. Drill hole in the curb shelf for conduit needed for motor wiring.
4. Operate the dampers manually to ensure the blades move freely.
5. Install fan over curb while aligning the conduit location with the conduit hole in the curb.

⚠WARNING

Smoke Control:

Use of any backdraft dampers is not permitted. Fire dampers and/or smoke dampers may be required in a smoke control system. These dampers must meet the requirements determined by the local code authority.

Wiring

ACRU Upblast units have two wiring conduits. The horizontal conduit is directly above the vertical conduit. ACE downblast units have a single vertical conduit.

The motor's wiring box is the approved field wiring compartment of the unit for ACE, ACRU and ACW units. The motor's wiring box may be on the side of the motor, the shaft end of the motor or the opposite shaft end of the motor. If an additional field wiring compartment is added, then an approved metal box with cover must be secured to the unit with two screws in order that the box does not rotate. All wiring must be protected from abrasion where they enter and exit. The ground wire must be secured under the green ground screw within the field wiring compartment. See motor wiring diagram, NEC and local code for additional details.

For VCR and ACSC units a separate NEMA 3 field wiring compartment is provided on the exterior of the unit.

⚠ ***For further information refer to the National Electrical Code and the wiring diagram provided on the***

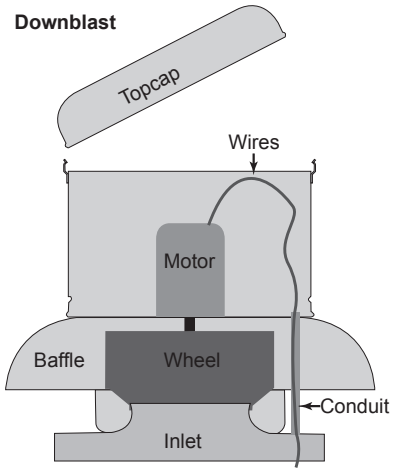

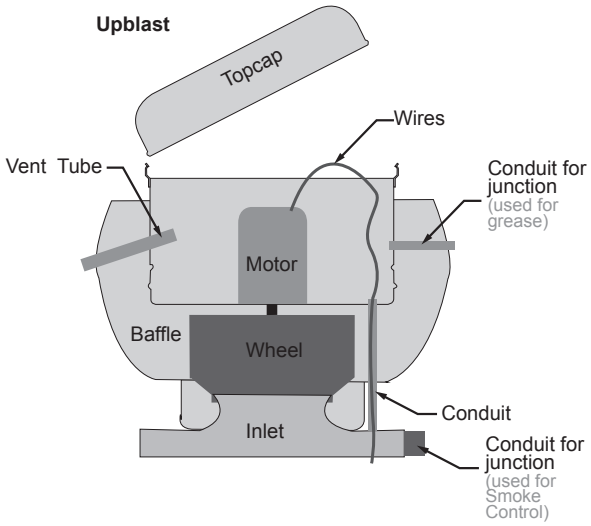

Leave enough slack in the wiring to allow for motor movement when adjusting belt tension. Some fractional motors have to be removed in order to make the connection with the terminal box at the end of the motor.

⚠ ***NOTICE! Follow the wiring diagram in the disconnect switch and the wiring diagram provided with the motor. Correctly label the circuit on the main power box and always identify a closed switch to promote safety (i.e., red tape over a closed switch).***

1. Remove the top cap which covers the motor assembly by unlatching the snap clips.
2. For internal wiring, run the electrical wire and conduit through the opening drilled in the damper shelf (refer to Damper Installation), then through the wiring conduit in the ventilator base to the motor compartment. For external wiring, run the wires through the horizontal conduit on upblast units, or under top cap in downblast units.
3. Pull the wires through and complete the wiring.

Use the following diagrams to wire the motor except for EC and EC/PM wiring diagrams; see additional supplement.

Wiring Diagrams

Vari-Flow

For EC or VF see EC Motor Wiring supplement. For VF2 see PM wiring supplement.

Single Speed, Single Phase Motor

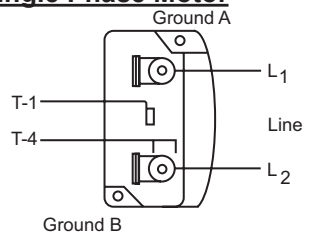

When ground is required, attach to ground A or B with No. 6 thread forming screw. To reverse, interchange T-1 and T-4.

2 Speed, 2 Winding, Single Phase Motor

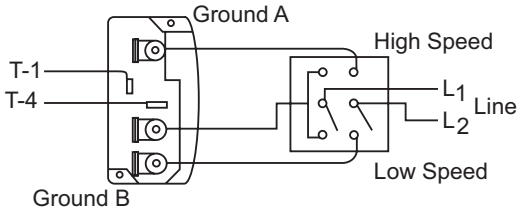

When ground is required, attach to ground A or B with No. 6 thread forming screw. To reverse, interchange T-1 and T-4 leads.

Single Speed, Single Phase, Dual Voltage

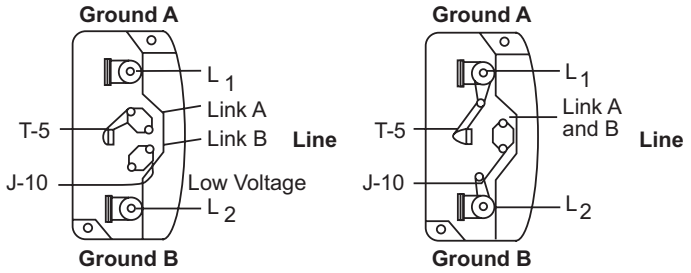

When ground is required, attach to ground A or B with No. 6 thread forming screw. To reverse, interchange T-5 and J-10 leads.

3-Phase, 9 Lead Motor

Y-Connection

Low Voltage 208/230 Volts

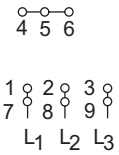

High Voltage 460 Volts

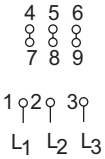

Delta-Connection

Low Voltage 208/230 Volts

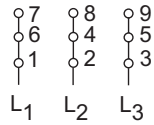

High Voltage 460 Volts

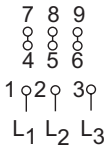

To reverse, interchange any two line leads.

2 Speed, 2 Winding, 3-Phase

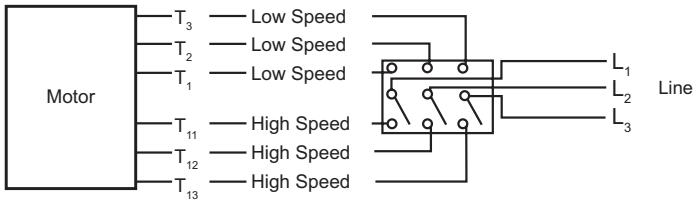

To reverse: High Speed: interchange leads T_{11} and T_{12}; Low Speed: interchange leads T_1 and T_2; Both Speeds: interchange any two line leads.

Typical Damper Motor Schematic

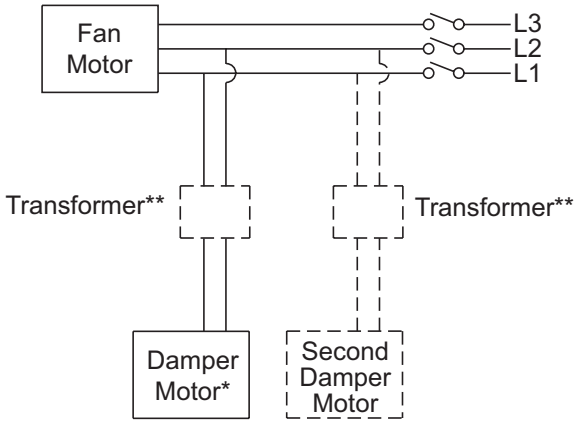

For 3-Phase, damper motor voltage should be the same between L_1 and L_2. For single phase application, disregard L_3.
*Damper motors may be available in 115, 230 and 460 volt models. The damper motor nameplate voltage should be verified prior to connection.
**A transformer may be provided in some installations to correct the damper motor voltage to the specified voltage.

2-Speed PSC Motors

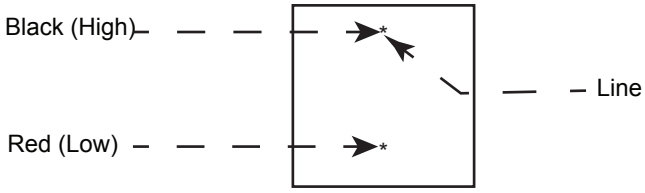

*Cap or insulate unused lead

FSC - 115 VOLT 10 AMP

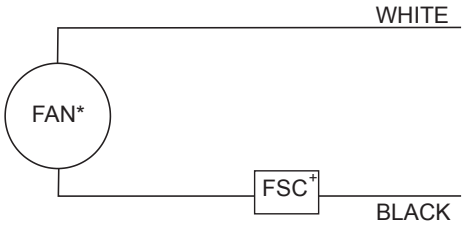

FSC - 240 VOLT 5 AMP

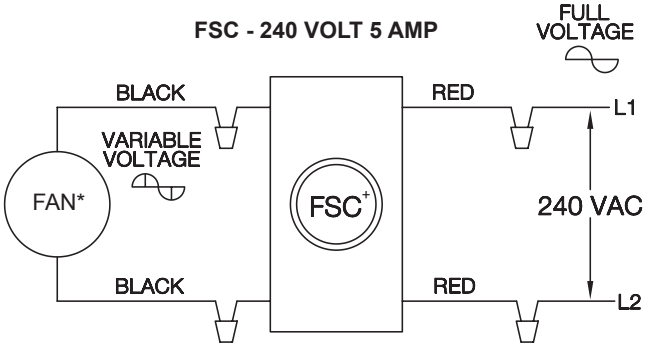

* See wiring diagram for motor wiring.
+ Locate away from heat.

Shade Pole or PSC Motors

White ——————————— Line

Black ——————————— Line

EC Motor Wiring

SUPPLEMENTAL INSTALLATION INSTRUCTIONS

This publication contains supplemental wiring instructions for units incorporating EC motors. Carefully read this publication prior to any installation or maintenance procedure.

Loren Cook catalogs provide additional information describing the equipment, fan performance, available accessories, and specification data. For additional safety information, refer to AMCA Publication 410-96, Safety Practices for Users and Installers of Industrial and Commercial Fans.

All of the publications listed above can be obtained from Loren Cook Company by phoning (417)869-6474, extension 166; by FAX at (417)832-9431; or by e-mail at info@lorencook.com. For information on special equipment, contact Loren Cook Company Customer Service Department at (417)869-6474.

TYPE M - EC MOTOR
PART NUMBERS 100179, 100180, 100181, 100182

FAN-MOUNTED SPEED CONTROL

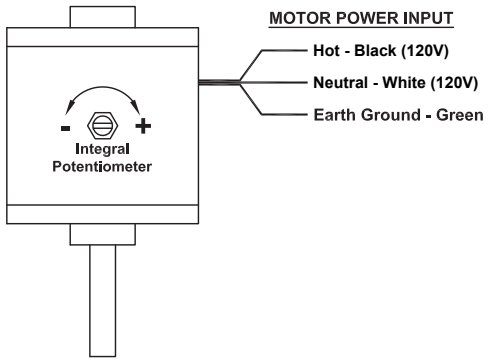

EXTERNAL SIGNAL 0-10VDC SPEED CONTROL

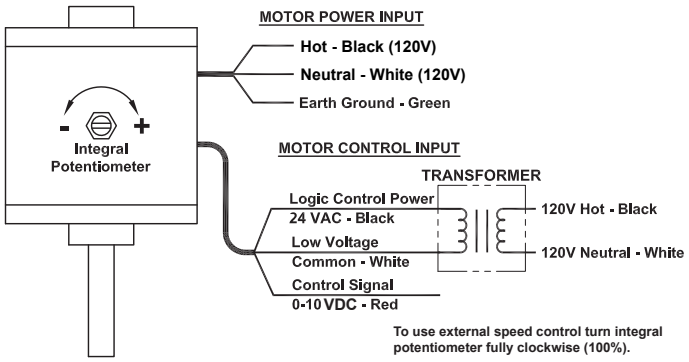

TYPE M1 - EC MOTOR PART NUMBERS 615273, 615278, 615271, 100218, 100220

FAN-MOUNTED SPEED CONTROL

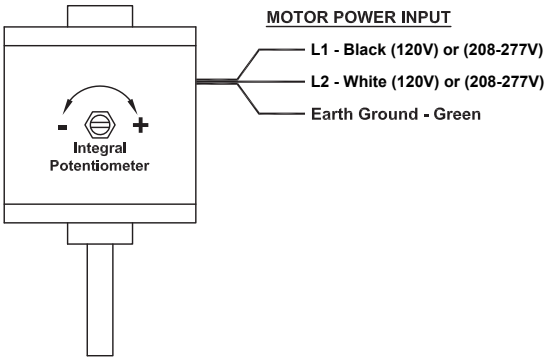

EXTERNAL SIGNAL 0-10VDC SPEED CONTROL

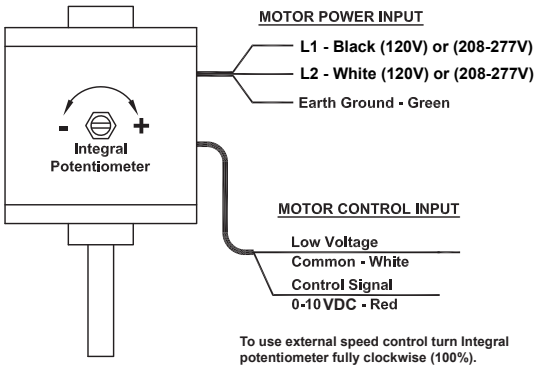

TYPE N - EC MOTOR PART NUMBERS 100201, 100202, 100203, 100214

FAN-MOUNTED SPEED CONTROL

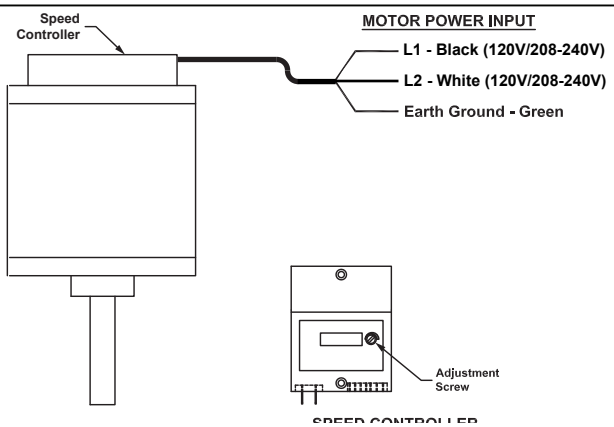

EXTERNAL SIGNAL 0-10VDC SPEED CONTROL

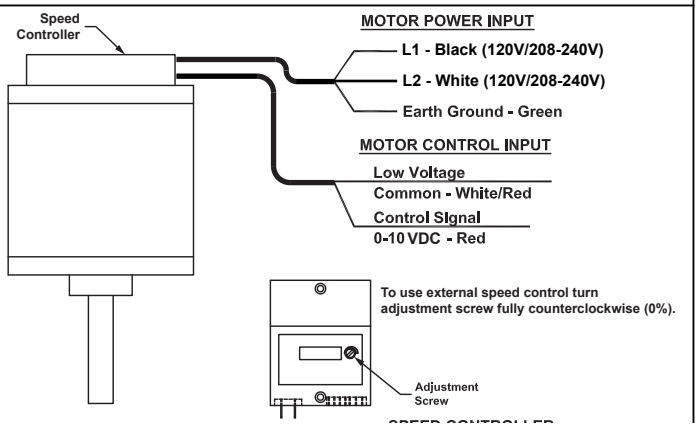

TYPE P - EC MOTOR PART NUMBERS 100175, 615267, 615269

FAN-MOUNTED SPEED CONTROL

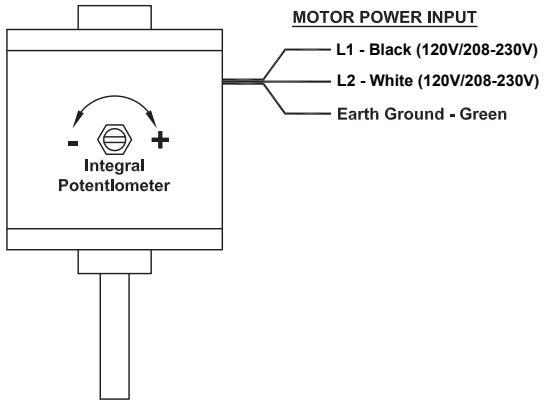

EXTERNAL SIGNAL 0-10VDC SPEED CONTROL

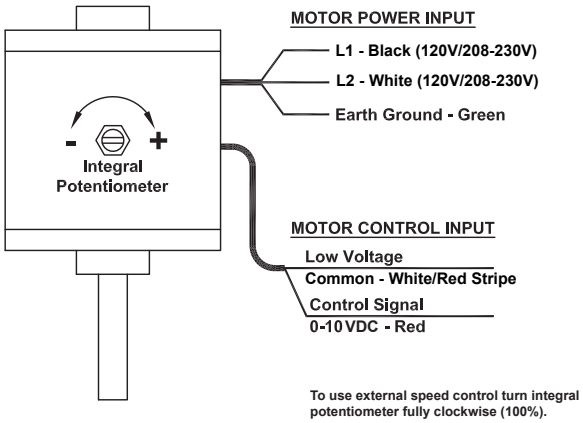

To use external speed control turn integral potentiometer fully clockwise (100%).

TYPE R - EC MOTOR PART NUMBER 100200

FAN-MOUNTED SPEED CONTROL

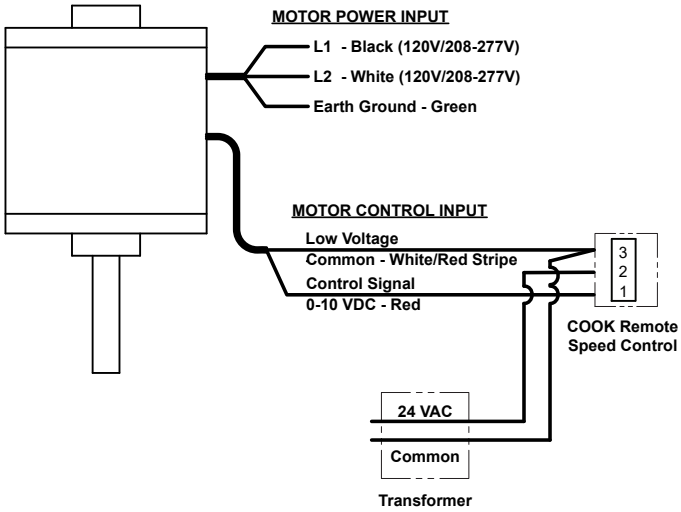

EXTERNAL SIGNAL 0-10VDC SPEED CONTROL

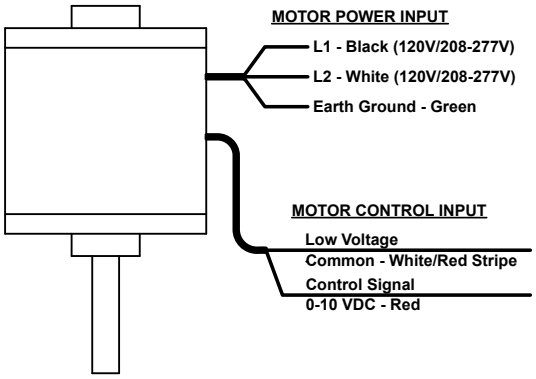

TYPE T - EC MOTOR PART NUMBER 100222

FAN-MOUNTED SPEED CONTROL

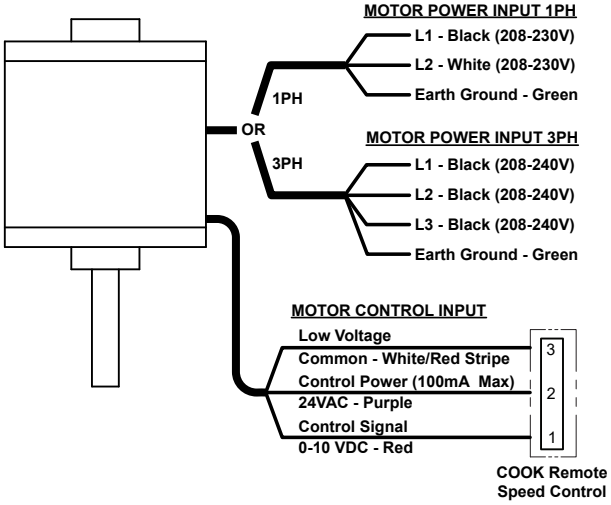

EXTERNAL SIGNAL 0-10VDC SPEED CONTROL

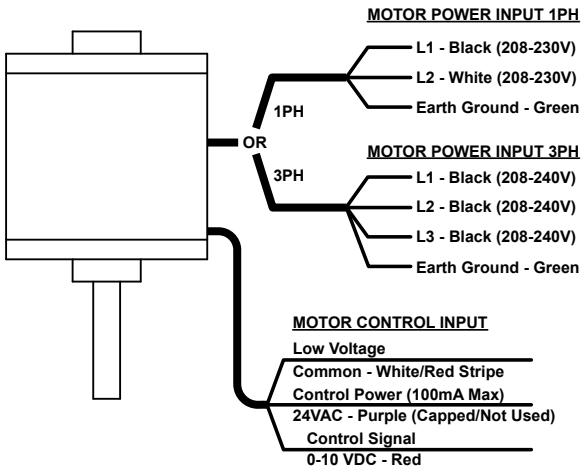

⚠WARNING

Electrical Shock & Fire Hazard:

Insulate Unused Leads Separately.

Failure to follow these instructions could result in death or serious injury.

Grease Terminator

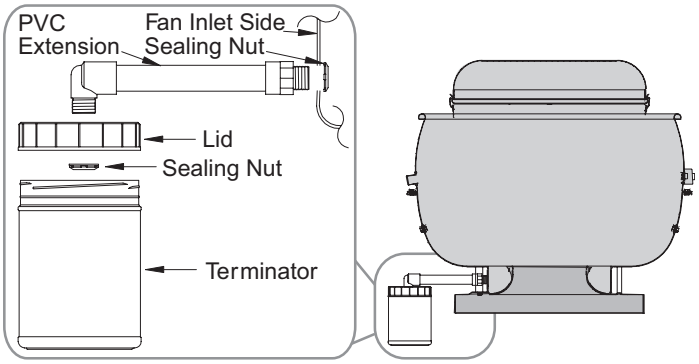

Final Installation Steps

1. Ensure fasteners and set screws, particularly fan mounting and bearing fasteners are tightened according to the recommended torque table, shown below.

Recommended Torque for Setscrews/Bolts (IN-LB)

Setscrews				Hold Down Bolts	
Size	Key Hex Across Flats	Recommended Torque		Size	Recommended Torque
		Min.	Max.		
#8	5/64”	15	21	3/8”-16	324
#10	3/32”	27	33	1/2”-13	780
1/4	1/8”	70	80	5/8”-11	1440
5/16	5/32”	140	160	3/4”-10	2400
3/8	3/16”	250	290	7/8”-9	1920
7/16	7/32”	355	405	1”-8	2700
1/2	1/4”	560	640	1-1/8”-7	4200
5/8	5/16”	1120	1280	1-1/4”-7	6000
3/4	3/8”	1680	1920	-	-
7/8	1/2”	4200	4800	-	-
1	9/16”	5600	6400	-	-

2. Inspect for correct amperage with an ammeter and correct voltage with a voltmeter.
3. Ensure that all accessories are installed.
4. Test the fan to be sure the rotation is the same as indicated by the arrow marked ‘Rotation’.

⚠ ***NOTICE! Do not allow the fan to run in the wrong direction. This will overheat the motor and cause serious damage. For 3-phase motors, if the fan is running in the wrong direction, check the control switch. It is possible to interchange two leads at this location so that the fan is operating in the correct direction.***

5. Inspect wheel-to-inlet clearance. Wheels may shift in shipment. To realign wheel-to-inlet, shift upper bearing so there is an equal radial clearance between the wheel and inlet.

Wheel-to-Inlet Clearance

The correct wheel-to-inlet clearance is critical to proper fan performance. This clearance should be verified before initial start-up since rough handling during shipment could cause a shift in fan components. Refer to wheel/inlet clearance for each

Adjust the overlap by loosening the wheel hub and moving the wheel along the shaft to obtain the correct value.

A uniform radial gap (space between the edge of the cone and the edge of the inlet) is obtained by loosening the upper or lower bearing.

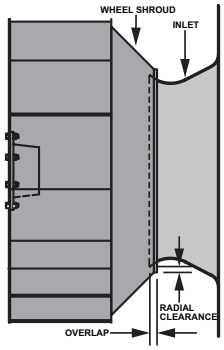

Size	Overlap
60 - 165	3/16”
180 - 245	1/4”
270 - 300	5/16”
330 - 365	3/8”
402	7/16”
445 - 490	1/2”
540	13/16”

Operation

Pre-Start Checks

1. Lock out all the primary and secondary power sources.
2. Inspect and tighten fasteners and setscrews, particularly fan mounting and bearing fasteners Refer to *Torque* chart.
3. Inspect belt tension and pulley alignment. Refer to *Belt and Pulley Installation*.
4. Inspect motor wiring. Refer to *Wiring Installation*.
5. Ensure belt touches only the pulleys.
6. Rotate the wheel to ensure it rotates freely.
7. Ensure fan and ductwork are clean and free of debris.
8. Close and secure all access doors.
9. Restore power to fan.

Start Up

Turn on the fan. (In variable speed units, set the fan to its lowest speed.) Inspect for the following:

- Direction of rotation
- Excessive vibration
- Unusual noise
- Bearing noise
- Improper belt alignment or tension (listen for squealing)
- Improper motor amperage or voltage

⚠ ***If a problem is discovered, immediately shut the fan off. Lock out all electrical power and check for the cause of the trouble. Refer to the Troubleshooting section.***

Use of Variable Frequency Drives

Motors

Motors that are to be operated using a Variable Frequency Drive (VFD) must be VFD compatible. Motors that are not supplied by Loren Cook Company should have the recommendation of the motor manufacturer for use with a VFD.

Grounding

The fan frame, motor and VFD must be connected to a common earth ground to prevent transient voltages from damaging rotating elements.

Wiring

Line reactors may be required to reduce over-voltage spikes in the motors. The motor manufacturer should be consulted for recommended line impedance and usage of line reactors

Fan

It is the responsibility of the installing body to perform coast-down tests and identify any resonant frequencies after the equipment is fully installed. These resonant frequencies are to be removed from the operating range of the fan by using the “skip frequency” function in the VFD programming. Failure to remove resonant frequencies from the operating range will decrease the operating life of the fan and void the warranty.

Inspection

Inspection of the fan should be conducted at the first 30 minute, 8 hour and 24 hour intervals of satisfactory operation. During the inspections, stop the fan and inspect as instructed.

30 Minute Interval

Inspect bolts, setscrews, and motor mounting bolts. Adjust and tighten as necessary.

8 Hour Interval

Inspect belt alignment and tension. Adjust and tighten as necessary.

24 Hour Interval

Inspect belt tension. Adjust and tighten as necessary

Year-round Inspection

Establish a schedule for inspecting all parts of the fan. The frequency of inspection depends on the operating conditions and location of the fan. Regular inspections may be required per local codes. Contact the local code authority for inspection requirements.

All Units

It is recommended the following inspections be conducted twice per year

- Inspect bolts and setscrews for tightness. Tighten as necessary. Refer to *Recommended Torque* chart
- Inspect belt wear and alignment. Replace worn belts with new belts and adjust alignment as needed. Refer to *Belt and Pulley Installation*, page 3
- Bearings should be inspected as recommended in the *Conditions Chart*
- Inspect for cleanliness. Clean exterior surfaces only. Removing dust and grease on motor housing assures proper motor cooling

Units exhausting corrosive or contaminated air

Inspect fans exhausting corrosive or contaminated air within the first month of operation. Fans exhausting contaminated air should be inspected every three months.

NOTICE! ACSC fan is intended for general ventilation, and is UL Listed for Smoke Control Systems. The fan should not be used to exhaust corrosive or contaminated air.

VCR & ACRU

Regular inspections of the Grease Terminator 2 are recommended. Depending on the amount of grease discharged through the fan, the Grease Terminator 2 should be changed every 30 to 45 days to ensure proper operation. Any buildup of grease is easily seen during a visual inspection of the clear canister. However, if the Grease Terminator 2 becomes saturated, grease will no longer be absorbed.

Maintenance

Fan Bearings

NOTICE! The fan bearings are provided prelubricated. Any specialized lubrication instructions on fan labels supersedes information provided herein. Bearing grease is a petroleum lubricant in a lithium base conforming to an NLGI #2 consistency. If user desires to utilize another type of lubricant, they take responsibility for flushing bearings and lines, and maintaining a lubricant that is compatible with the installation.

Relubrication Intervals

RPM	Temp °F	Greasing Interval
Up to 1000	-30 to 120	6 months
	120 to 200	2 months
1000 to 3000	-30 to 120	3 months
	120 to 200	1 month
Over 3000	-30 to 120	1 month
	120 to 200	2 weeks
Any Speed	< -30	Consult Factory
Any Speed	> 200	1 week

For moist or otherwise contaminated installations; divide the interval by a factor of three. For vertical shaft installations divide the interval by a factor of two.

For best results, lubricate the bearing while the fan is in operation. Pump grease in slowly until a slight bead forms around the bearing seals. Excessive grease can damage seal and reduce life through excess contamination and/or loss of lubricant.

In the event that the bearing cannot be seen, use no more than three injections with a hand operated grease gun.

Motor Bearings

Motors are provided with prelubricated bearings. Any lubrication instructions shown on the motor nameplate supersede instructions below.

Motor bearings without provisions for relubrication should operate up to 10 years under normal conditions with no maintenance. In severe applications, high temperatures or excessive contaminates, it is advisable to have the maintenance department disassemble and lubricate the bearings after three years of operation to prevent interruption of service. For motors with provisions for relubrication, follow intervals of the table.

NOTICE! Motors are provided with a polyurea mineral oil NGLI #2 grease. All additions to the motor bearings are to be with a compatible grease such as Exxon Mobil Polyrex EM and Chevron SRI. To inspect, clean or repair, refer to the diagram below and follow these steps:

Service Conditions	NEMA Frame Size					
	Up to & Including 184T		213T - 365T		404T and Larger	
	1800 RPM and less	Over 1800 RPM	1800 RPM and less	Over 1800 RPM	1800 RPM and less	Over 1800 RPM
Standard	3 yrs	6 months	2 yrs	6 months	1 yr	3 months
Severe	1 yr	3 months	1 yr	3 months	6 months	1 month

The above intervals should be reduced to half for vertical shaft installations.

Motor Services

Should the motor prove defective within a one-year period, contact your local Loren Cook representative or your nearest authorized electric motor service representative.

Changing Shaft Speed

Belt driven ventilators (5HP or less) are equipped with variable pitch pulleys. To change fan speed, perform the following

1. Remove belt (see pulleys/belts for details).
2. Loosen setscrew on driver (motor) pulley and remove key, if equipped.
3. Turn the pulley rim to open or close the groove facing. If the pulley has multiple grooves, all must be adjusted to the same width.
4. After adjustment, reinstall belt and inspect for proper belt tension.

Maximum RPM

Size	ACE		ACRU, ACSC, ACW & VCR				
			Standard		HP		XP
	Standard	Reinforced	Standard	Reinforced	Standard	Reinforced	Standard
60	1981	-	-	-	-	-	-
70	1941	-	-	-	-	-	-
80	1806	-	-	-	-	-	-
100	2013	-	2002	-	-	-	-
120	1669	-	1671	-	-	-	-
135	1574	-	1574	-	-	-	-
150	1519	-	1520	-	1952	-	-
165	1296	-	1295	-	1728	-	2508
180	1513	-	1546	-	1829	-	2396
195	1348	-	1353	-	1570	-	2100
210	1190	-	1205	-	1626	-	2126
225	1043	-	1086	-	1435	-	1879
245	885	-	901	-	1185	1234	1616
270	752	-	766	-	1025	1049	1656
300	837	861	837	877	980	1046	1391
330	716	734	716	748	830	912	1182
365	624	648	624	659	735	872	1132
402	539	550	539	560	-	-	-
445	463	465	463	473	-	-	-
490	360	396	360	403	-	-	-
540	347	401	-	-	-	-	-

Speed Reduction:

Open the pulley in order that the belt rides deeper in the groove (smaller pitch diameter).

Speed Increase:

Close the pulley in order that the belt rides higher in the groove (larger pitch diameter). Ensure that the RPM limits of the fan and the horsepower limits of the motor are maintained.

Replace Pulleys / Belts

1. Clean the motor and fan shafts.
2. Loosen the motor plate mounting bolts to relieve the belt tension. Remove the belt.
3. Loosen the pulley setscrews and remove the pulleys from the shaft. If excessive force is required to remove the pulleys, a three-jaw puller can be used. This tool, however, can easily warp a pulley. If the puller is used, inspect the trueness of the pulley after it is removed from the shaft. The pulley will need replacement if it is more than 0.020 inch out of true.
4. Clean the bores of the pulleys and place a light coat of oil on the bores.
5. Remove any grease, rust or burrs from pulleys.
6. Place the fan pulley on the fan shaft and the motor pulley on the motor shaft. Damage to the pulleys can occur when excessive force is used in placing the pulleys on their re-
7. After the pulleys have been correctly placed back onto their shafts, tighten the pulley setscrews.

Belt tension

Belt tension is determined by the sound of the belts when the fan is first started. The belts will produce a loud squeal, which dissipates after the fan is operating at full capacity. If belt tension is too tight or too loose, lost efficiency and damage may occur.

Do not change the pulley pitch diameter to change tension. The change will result in a different fan speed.

For units shipped with automatic belt tensioners please refer to the *Automatic Belt Tensioner Supplement I*.

Figure 1

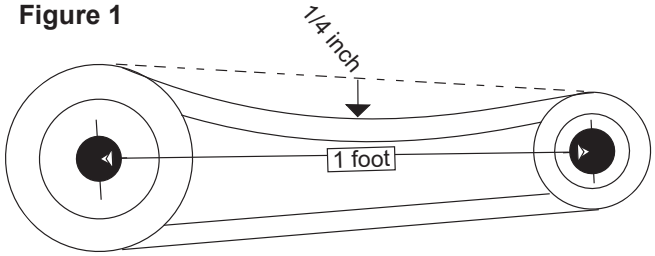

1. Loosen motor plate adjustment bolts and slide motor plate so that belts easily slip into the grooves on the pulleys. Never pry, roll, or force the belts over the rim of the pulley.
2. Slide motor plate until proper tension is reached. For proper tension, a deflection of approximately 1/4” per foot of center distance should be obtained by firmly pressing the belt. Refer to *Figure 1*.
3. Lock the motor plate adjustment bolts in place.
4. Ensure pulleys are properly aligned. Refer to *Figure 2*.

Figure 2

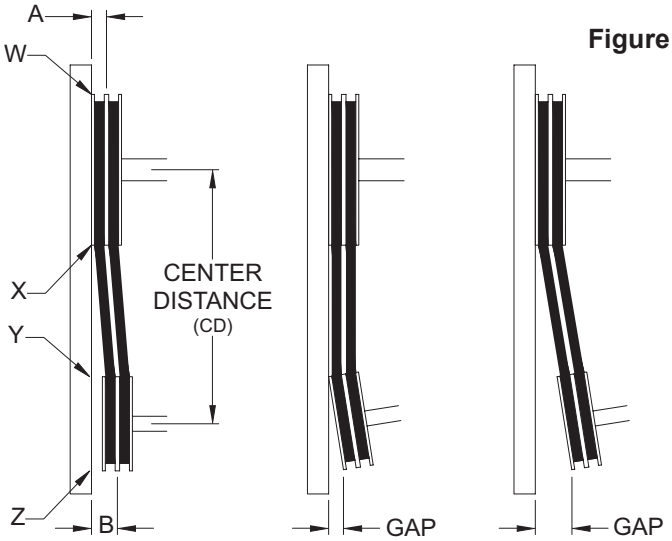

Center Distance	Maximum Gap
Up through 12”	1/16”
12 through 48”	1/8”
Over 48”	1/4”

Belt Alignment

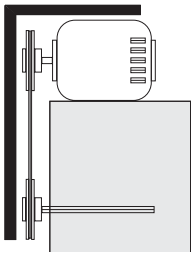

Pulley alignment is adjusted by loosening the motor pulley setscrew and by moving the motor pulley on the motor shaft. *Figure 2* indicates where to measure the allowable gap for the drive alignment tolerance. All contact points (indicated by WXYZ) are to have a gap less than the tolerance shown

same width, the allowable gap must be adjusted by half of the difference in width. *Figure 3* illustrates using a carpenter's square to adjust the position of the motor pulley until the belt is parallel to the longer leg of the square.

Bearing Replacement

The fan bearings are pillow block type ball bearings.

1. Remove the old bearing.
2. Remove any burrs from the shaft by sanding.
3. Slide new bearings onto the shaft to the desired location and loosely mount bearings onto the bearing support. Bearing bolts and setscrews should be loose enough to allow shaft positioning.
4. Correctly position the wheel and tighten the bearing bolts securely to the bearing support.
5. Align setscrews bearing to bearing and secure tightly to the shaft.

NOTICE! Never tighten both pairs of setscrews before securing bearing mounting bolts. This may damage the shaft.

6. Inspect the wheel position again. If necessary, readjust by loosening the bearing bolts and setscrews and repeat from step 3.

Wheel Replacement

1. Drill two holes approximately centered between the shaft and the edge of the hub outer dimension with the following dimensions:
   - 1/4" diameter
   - 3/8" to 1/2" deep
   - 180° apart in face of hub
2. Tap 1/4" holes to 5/16" thread with the 5/16" hole tap. Do not drill or tap any larger than recommended.
3. Screw the puller arms into the tapped holes full depth of threads (3/8" to 1/2" approximately). Align center of puller with center of shaft. Make certain all setscrews in hub (normally a quantity of two) are fully removed. Work puller slowly to back wheel off the shaft.

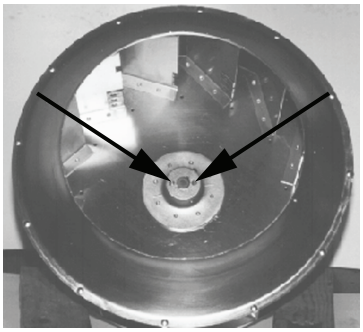

Drilled Hole Location

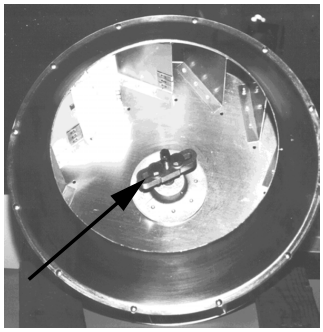

Wheel Puller

Recommended Puller:

Lisle No. 45000 Steering Wheel Puller. This puller is available at most automotive parts retail outlets.

Troubleshooting

Problem and Potential Cause
Low Capacity or Pressure: • Incorrect direction of rotation. Make sure the fan rotates in same direction as the arrows on the motor or belt drive assembly. • Poor fan inlet conditions. There should be a straight clear duct at the inlet. • Improper wheel alignment.
Excessive Vibration and Noise: • Damaged or unbalanced wheel. • Belts too loose; worn or oily belts. • Speed too high. • Incorrect direction of rotation. Make sure the fan rotates in same direction as the arrows on the motor or belt drive assembly. • Bearings need lubrication or replacement. • Fan surge. • For direct drive, make sure hub setscrew, if available, is tightened down on motor shaft or on key. For direct drive units with bushing, the hub setscrew, if available, needs to go through the bushing and then tightened down on the motor shaft or on key.
Overheated Motor: • Motor improperly wired. • Incorrect direction of rotation. Make sure the fan rotates in same direction as the arrows on the motor or belt drive assembly. • Cooling air diverted or blocked. • Improper inlet clearance. • Incorrect fan RPMs. • Incorrect voltage.
Overheated Bearings: • Improper bearing lubrication • Excessive belt tension

ACE-D Parts

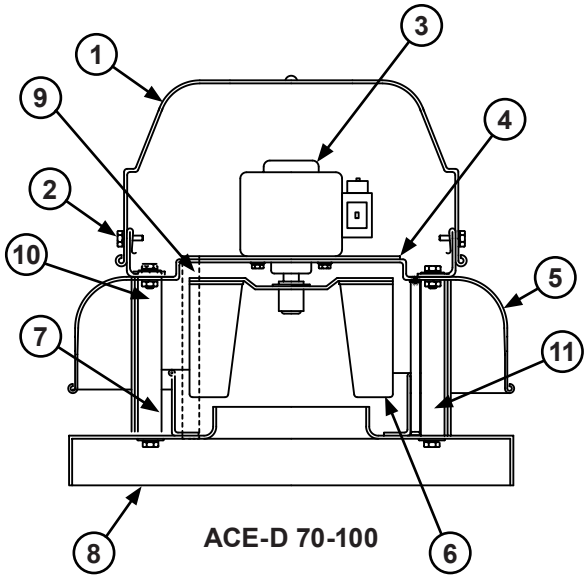

ACE-D 70-100

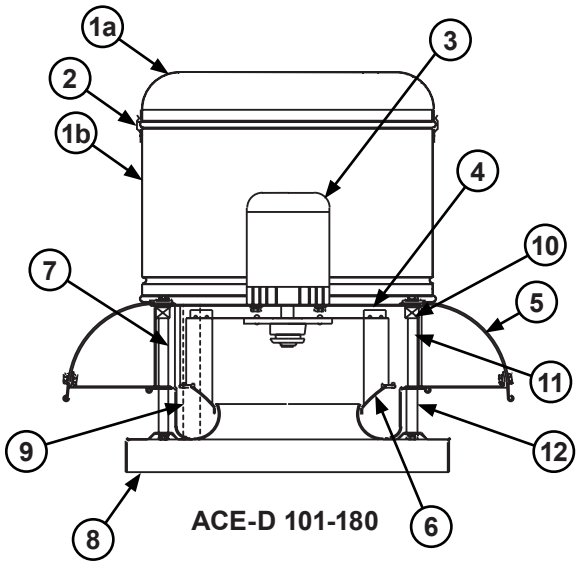

ACE-D 101-180

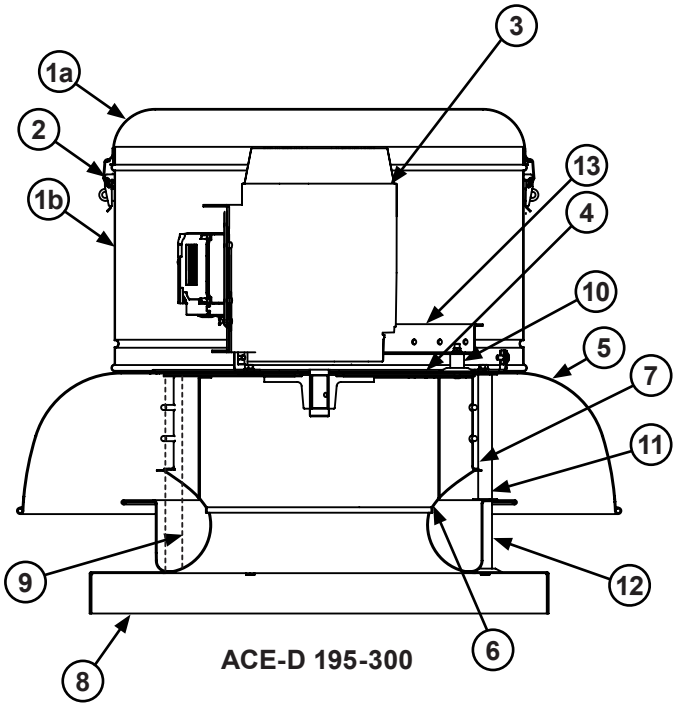

ACE-D 195-300

Item #	ACE-D Description			
	70-100	101-180	150-245	270-300
1a	Top Cap	Top Cap Lid	Top Cap Lid	Top Cap Lid
1b		Top Cap Cylinder	Top Cap Cylinder	Top Cap Cylinder
2	Bolts (4)	Top Cap Clip (4)	Top Cap Clip (4)	Top Cap Clip (4)
3	Motor	Motor	Motor	Motor
4	Motor Plate	Motor Plate	Motor Plate	Motor Plate
5	Baffle	Baffle	Baffle	Baffle
6	Wheel Assembly	Wheel Assembly	Wheel Assembly	Wheel Assembly
7	Bird Screen	Bird Screen	Bird Screen	Bird Screen
8	Base	Base	Base	Base
9	Conduit	Conduit	Conduit	Conduit
10	Spacer (4)	Spacer (4)	Spacer (4)	Spacer (4)
11	Post (4)	Upper Post (4)	Upper Post (4)	Upper Post (8)
12	-	Lower Post (4)	Lower Post (4)	Lower Post (8)
13	-	-	Power Assembly	Power Assembly

ACE-B Parts

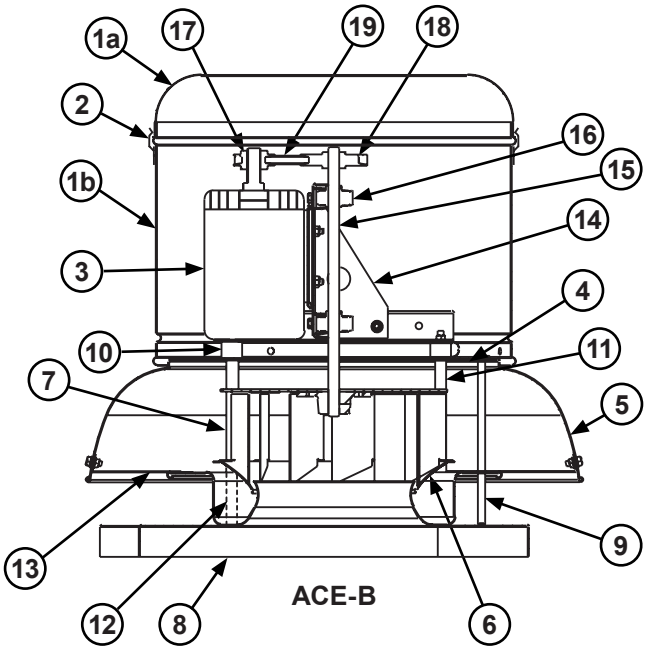

ACE-B

Item #	ACE-B Parts Description			
	60-100	120-245	270-300	330-540
1a	Top Cap Lid	Top Cap Lid	Top Cap Lid	Top Cap Lid
1b	Top Cap Cylinder	Top Cap Cylinder	Top Cap Cylinder	Top Cap Cylinder
2	Top Cap Clip (4)	Top Cap Clip (4)	Top Cap Clip (8)	Top Cap Clip (8)
3	Motor	Motor	Motor	Motor
4	-	Motor Plate	Motor Plate	Motor Plate
5	Baffle	Baffle	Baffle	Baffle
6	Wheel Assembly	Wheel Assembly	Wheel Assembly	Wheel Assembly
7	Bird Screen	Bird Screen	Bird Screen	Bird Screen
8	Base	Base	Base	Base
9	Conduit	Conduit	Conduit	Conduit
10	Spacer (4)	Spacer (4)	Spacer (4)	Spacer (4)
11	Upper Post (4)	Upper Post (4)	Upper Post (8)	Upper Post (8)
12	Lower Post (4)	Lower Post (4)	Lower Post (8)	Lower Post (8)
13	-	-	-	Brace (8)
14	Power Assembly	Power Assembly	Power Assembly	Power Assembly
15	Shaft	Shaft	Shaft	Shaft
16	Bearing	Bearing	Bearing	Bearing
17	Drive Sheave	Drive Sheave	Drive Sheave	Drive Sheave
18	Driven Sheave	Driven Sheave	Driven Sheave	Driven Sheave
19	Belt Set	Belt Set	Belt Set	Belt Set

ACW-D Parts

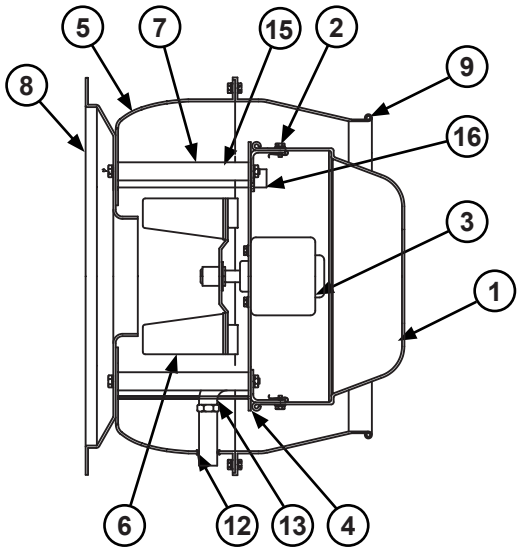

ACW-D 70-100

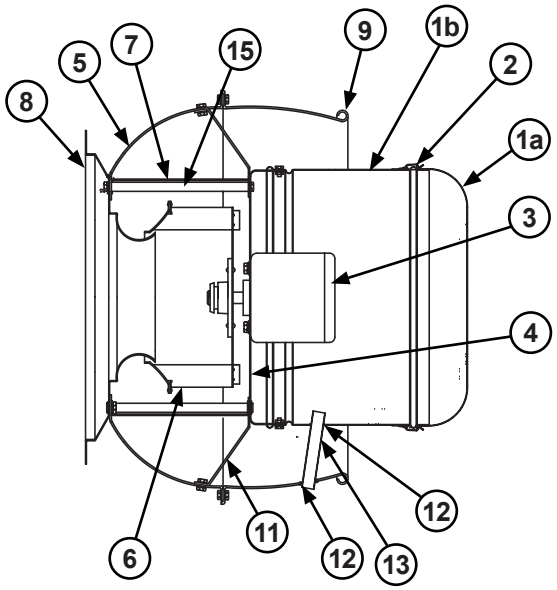

ACW-D 101-195
C-Face Mount

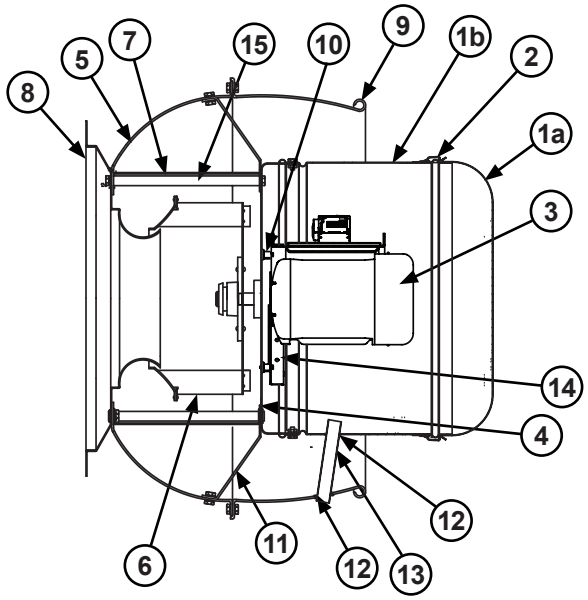

Item #	ACW-D Description		
	70-100	101-195	150-245
1a	Top Cap	Top Cap Lid	Top Cap Lid
1b		Top Cap Cylinder	Top Cap Cylinder
2	Bolts (4)	Top Cap Clip (4)	Top Cap Clip (4)
3	Motor	Motor	Motor
4	Motor Plate	Motor Plate	Motor Plate
5	Baffle	Baffle	Baffle
6	Wheel Assembly	Wheel Assembly	Wheel Assembly
7	Bird Screen	Bird Screen	Bird Screen
8	Wall Flange	Wall Flange	Wall Flange
9	Windband	Windband	Windband
10	-	Spacer (4)	Spacer (8)
11	-	Brace (4)	Brace (4)(150-195) Brace (8)(210-245)
12	Grommet (2)	Grommet (2)	Grommet (2)
13	Cooling Tube-Angled	Cooling Tube	Cooling Tube
14	-	-	Power Assembly
15	Post (4)	Post (4)	Post (4) 150-195 Post (8) 210-245
16	Conduit	-	-

ACW-B Parts

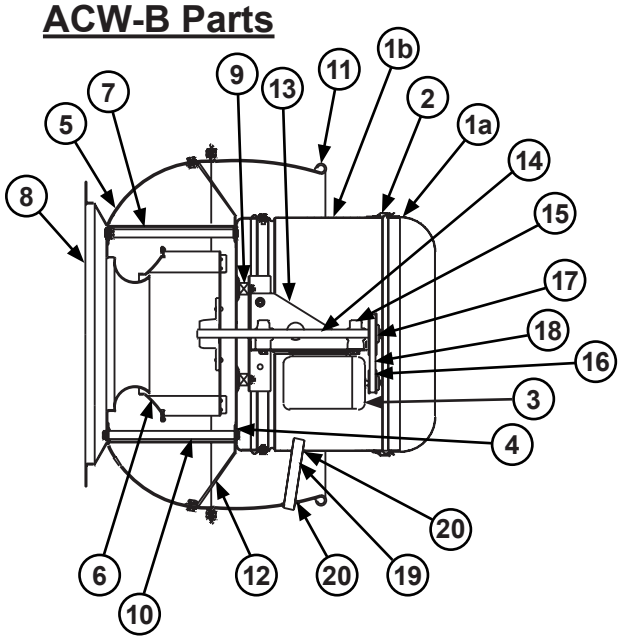

Item #	ACW-B Parts Description		
	100	120-165	180-245
1a	Top Cap Lid	Top Cap Lid	Top Cap Lid
1b	Top Cap Cylinder	Top Cap Cylinder	Top Cap Cylinder
2	Top Cap Clip (4)	Top Cap Clip (4)	Top Cap Clip (8)
3	Motor	Motor	Motor
4	Motor Plate	Motor Plate	Motor Plate
5	Baffle	Baffle	Baffle
6	Wheel Assembly	Wheel Assembly	Wheel Assembly
7	Bird Screen	Bird Screen	Bird Screen
8	Wall Flange	Wall Flange	Wall Flange
9	Spacer (4)	Spacer (4)	Spacer (4)
10	Post (4)	Post (4)	Post (8)
11	Wind Band	Wind Band	Wind Band
12	-	Brace (4)	Brace (8)
13	Power Assembly	Power Assembly	Power Assembly
14	Shaft	Shaft	Shaft
15	Bearing (2)	Bearing (2)	Bearing (2)
16	Drive Sheave	Drive Sheave	Drive Sheave
17	Driven Sheave	Driven Sheave	Driven Sheave
18	Belt Set	Belt Set	Belt Set
19	Vent Tube	Vent Tube	Vent Tube
20	Grommet (2)	Grommet (2)	Grommet (2)

ACRU-D Parts

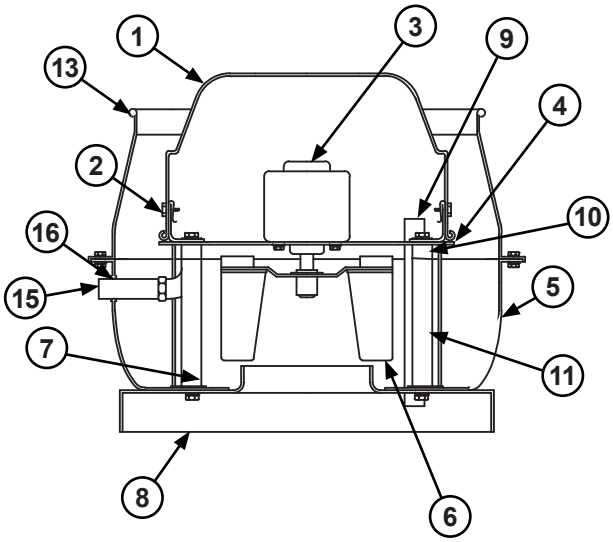

ACRU-D Sizes 70-100

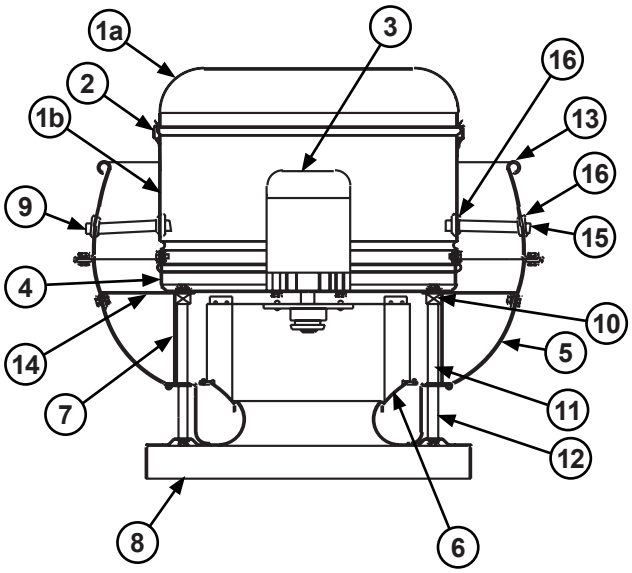

ACRU-D Sizes 101-195 C-Face

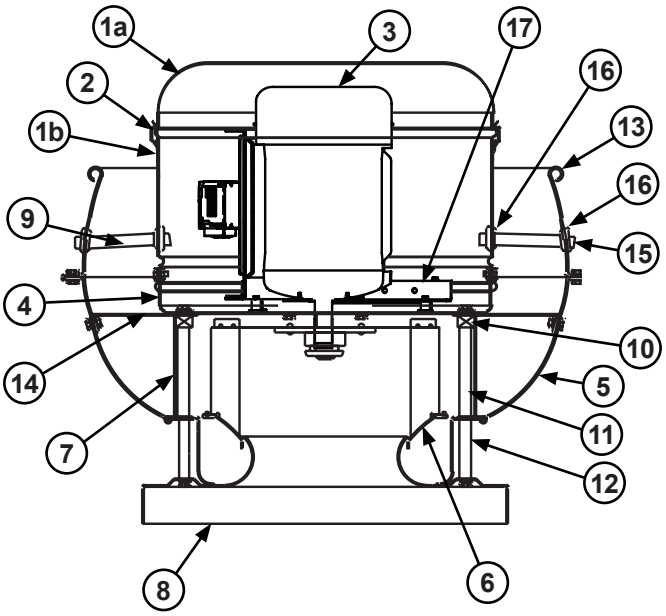

ACRU-D Sizes 150-300 Base Mount

Item #	ACRU-D Parts Description		
	70-100	101-195	150-300
1a	Top Cap	Top Cap Lid	Top Cap Lid
1b	-	Top Cap Cylinder	Top Cap Cylinder
2	Bolts (4)	Top Cap Clip (4)	Top Cap Clip (8)
3	Motor	Motor	Motor
4	Motor Plate	Motor Plate	Motor Plate
5	Baffle	Baffle	Baffle
6	Wheel Assembly	Wheel Assembly	Wheel Assembly
7	Bird Screen	Bird Screen	Bird Screen
8	Base	Base	Base
9	Conduit	Conduit	Conduit
10	Spacer (4)	Spacer (4)	Spacer (8)
11	Post (4)	Upper Post (4)	Upper Post (8)
12	-	Lower Post (4)	Lower Post (8)
13	Wind Band	Wind Band	Wind Band
14	-	Brace (4)	Brace (8)
15	Vent Tube-Angled	Vent Tube-Angled	Vent Tube-Angled
16	Grommet (2)	Grommet (2)	Grommet (2)

ACRU-B Parts

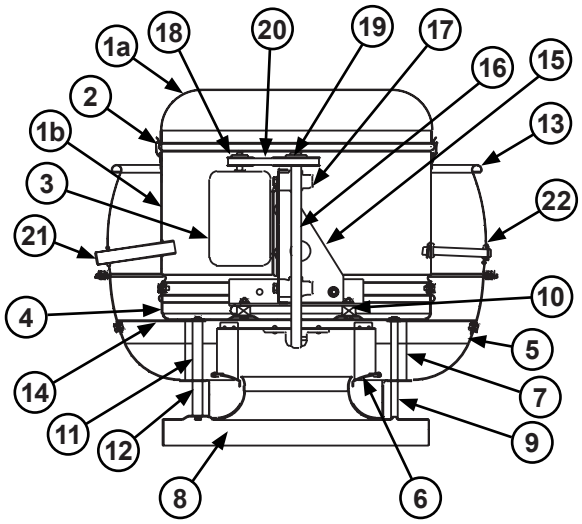

Item #	ACRU-B Parts Description		
	100	120-245	270-490
1a	Top Cap Lid	Top Cap Lid	Top Cap Lid
1b	Top Cap Cylinder	Top Cap Cylinder	Top Cap Cylinder
2	Top Cap Clip (4)	Top Cap Clip (4)	Top Cap Clip (8)
3	Motor	Motor	Motor
4	Motor Plate	Motor Plate	Motor Plate
5	Baffle	Baffle	Baffle
6	Wheel Assembly	Wheel Assembly	Wheel Assembly
7	Bird Screen	Bird Screen	Bird Screen
8	Base	Base	Base
9	Conduit	Conduit	Conduit
10	Spacer (4)	Spacer (4)	Spacer (8)
11	Upper Post (4)	Upper Post (4)	Upper Post (8)
12	Lower Post (4)	Lower Post (4)	Lower Post (8)
13	Wind Band	Wind Band	Wind Band
14	-	Brace (4)	Brace (8)
15	Power Assembly	Power Assembly	Power Assembly
16	Shaft	Shaft	Shaft
17	Bearing (2)	Bearing (2)	Bearing (2)
18	Drive Sheave	Drive Sheave	Drive Sheave
19	Driven Sheave	Driven Sheave	Driven Sheave
20	Belt Set	Belt Set	Belt Set
21	Vent Tube	Vent Tube	Vent Tube
22	Grommet (2)	Grommet (2)	Grommet (2)

VCR-D Parts

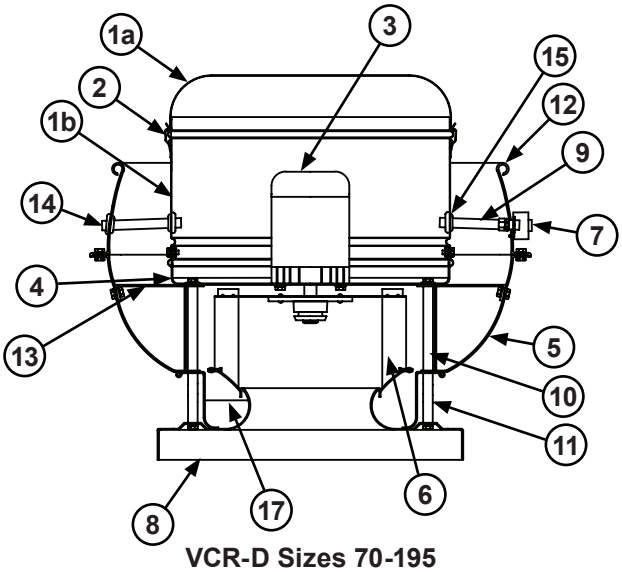

VCR-D Sizes 70-195

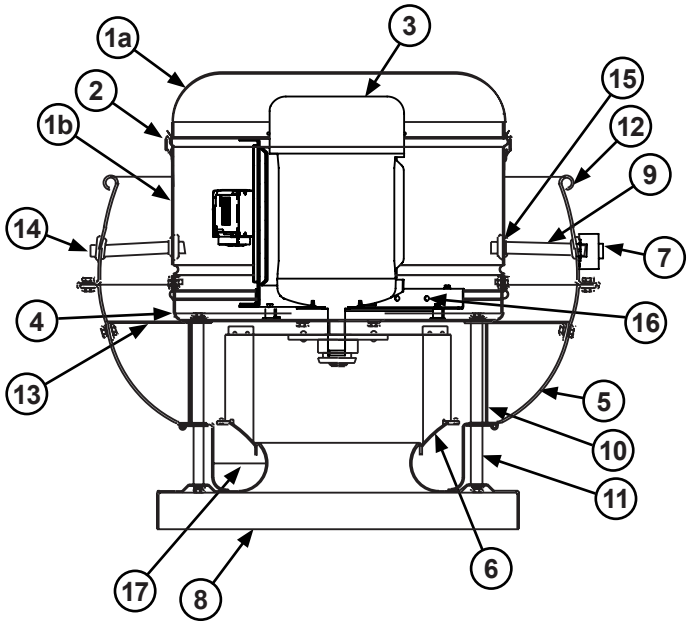

VCR-D Sizes 210-300

Item #	VCR-D Parts Description	
	101-195	210-300
1a	Top Cap Lid	Top Cap Lid
1b	Top Cap Cylinder	Top Cap Cylinder
2	Top Cap Clip (4)	Top Cap Clip (4) (210-245) Top Cap Clip (8) (270-300)
3	Motor	Motor
4	Motor Plate	Motor Plate
5	Baffle	Baffle
6	Wheel Assembly	Wheel Assembly
7	NEMA 3 Junction	NEMA 3 Junction
8	Base	Base
9	Conduit	Conduit
10	Upper Post (4)	Upper Post (4) (210-245) Upper Post (8) (270-300)
11	Lower Post (4)	Lower Post (8)
12	Wind Band	Wind Band
13	Brace (4)	Brace (8)
14	Vent Tube	Vent Tube
15	Grommet (2)	Grommet (2)
16	-	Power Assembly
17	Cut Off*	Cut Off*

VCR-B Parts

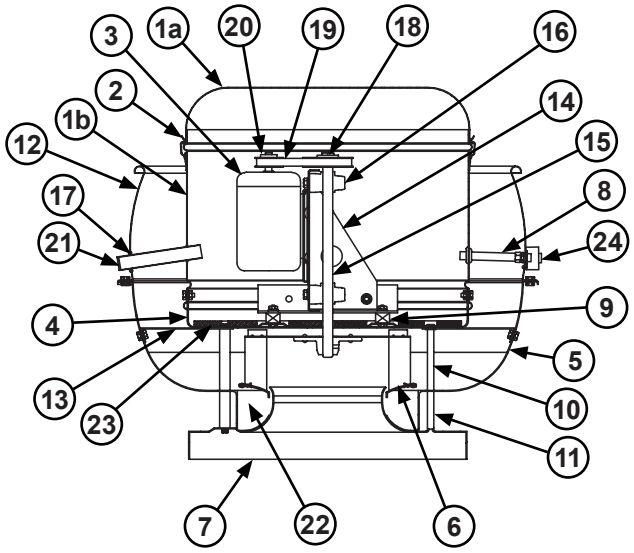

VCR-B Sizes 100-490

Item #	VCR-B Parts Description		
	100-225	245	270-490
1a	Top Cap Lid	Top Cap Lid	Top Cap Lid
1b	Top Cap Cylinder	Top Cap Cylinder	Top Cap Cylinder
2	Top Cap Clip (4)	Top Cap Clip (4)	Top Cap Clip (8)
3	Motor	Motor	Motor
4	Motor Plate	Motor Plate	Motor Plate
5	Baffle	Baffle	Baffle
6	Wheel Assembly	Wheel Assembly	Wheel Assembly
7	Base	Base	Base
8	Conduit	Conduit	Conduit
9	Spacer (4)	Spacer (4)	Spacer (4)
10	Upper Post (4)	Upper Post (4)	Upper Post (8)
11	Lower Post (4)	Lower Post (4)	Lower Post (8)
12	Wind Band	Wind Band	Wind Band
13	Brace (4)	Brace (4)	Brace (8)
14	Power Assembly	Power Assembly	Power Assembly
15	Shaft	Shaft	Shaft
16	Bearing (2)	Bearing (2)	Bearing (2)
17	Vent Tube	Vent Tube	Vent Tube
18	Driven Sheave	Driven Sheave	Driven Sheave
19	Belt Set	Belt Set	Belt Set
20	Drive Sheave	Drive Sheave	Drive Sheave
21	Grommet (2)	Grommet (2)	Grommet (2)
22	Cut Off*	Cut Off*	Cut Off*
23	Insulation	Insulation	Insulation
24	NEMA 3 Junction Box	NEMA 3 Junction Box	NEMA 3 Junction Box

*Cut off Plate is only on the VCR-HP and VCR-XP.

ACSC Parts

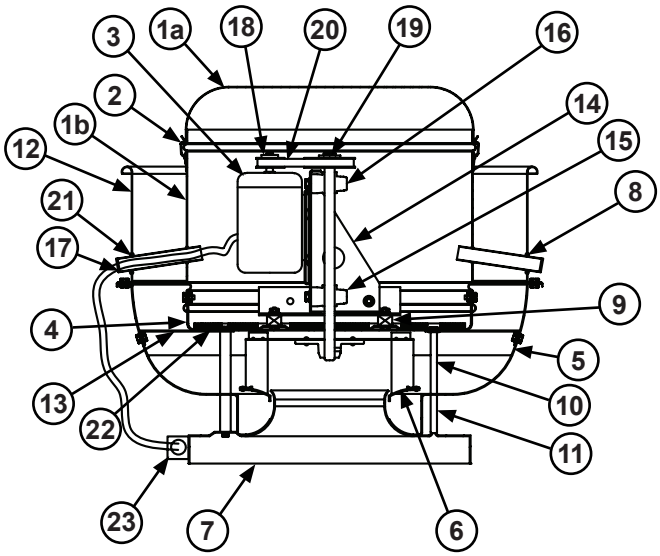

ACSC-D Sizes 100-490

Item #	ACSC-B Parts Description		
	100-225	245	270-490
1a	Top Cap Lid	Top Cap Lid	Top Cap Lid
1b	Top Cap Cylinder	Top Cap Cylinder	Top Cap Cylinder
2	Top Cap Clip (4)	Top Cap Clip (4)	Top Cap Clip (8)
3	Motor	Motor	Motor
4	Motor Plate	Motor Plate	Motor Plate
5	Baffle	Baffle	Baffle
6	Wheel Assembly	Wheel Assembly	Wheel Assembly
7	Base	Base	Base
8	Conduit	Conduit	Conduit
9	Isolator (4)	Isolator (4)	Isolator (8)
10	Upper Post (4)	Upper Post (4)	Upper Post (8)
11	Lower Post (4)	Lower Post (4)	Lower Post (8)
12	Wind Band	Wind Band	Wind Band
13	Brace (4)	Brace (4)	Brace (8)
14	Power Assembly	Power Assembly	Power Assembly
15	Shaft	Shaft	Shaft
16	Bearing (2)	Bearing (2)	Bearing (2)
17	Liquid Tite Conduit	Liquid Tite Conduit	Liquid Tite Conduit
18	Driven Sheave	Driven Sheave	Driven Sheave
19	Belt Set	Belt Set	Belt Set
20	Vent Tube	Vent Tube	Vent Tube
21	Grommet (2)	Grommet (2)	Grommet (2)
22	Insulation	Insulation	Insulation
23	NEMA 3 Junction Box	NEMA 3 Junction Box	NEMA 3 Junction Box

Limited Warranty

Loren Cook Company warrants that your Loren Cook fan was manufactured free of defects in materials and workmanship, to the extent stated herein. For a period of one (1) year after date of shipment, we will replace any parts found to be defective without charge, except for shipping costs which will be paid by you. This warranty is granted only to the original purchaser placing the fan in service. This warranty is void if the fan or any part thereof has been altered or modified from its original design or has been abused, misused, damaged or is in worn condition or if the fan has been used other than for the uses described in the company manual. This warranty does not cover defects resulting from normal wear and tear. To make a warranty claim, notify Loren Cook Company, General Offices, 2015 East Dale Street, Springfield, Missouri 65803-4637, explaining in writing, in detail, your complaint and referring to the specific model and serial numbers of your fan. Upon receipt by Loren Cook Company of your written complaint, you will be notified, within thirty (30) days of our receipt of your complaint, in writing, as to the manner in which your claim will be handled. If you are entitled to warranty relief, a warranty adjustment will be completed within sixty (60) business days of the receipt of your written complaint by Loren Cook Company. This warranty gives only the original purchaser placing the fan in service specifically the right. You may have other legal rights which vary from state to state. For fans provided with motors, the motor manufacturer warrants motors for a designated period stated in the manufacturer's warranty. Warranty periods vary from manufacturer to manufacturer. Should motors furnished by Loren Cook Company prove defective during the designated period, they should be returned to the nearest authorized motor service station. Loren Cook Company will not be responsible for any removal or installation costs.

LOREN COOK COMPANY

Corporate Offices: 2015 E. Dale St. Springfield, MO 65803

Phone 417-869-6474 | Fax 417-862-3820 | lorencook.com