Quality People. Building Solutions.

Comfort Systems USA (Arkansas), Inc.
P.O. Box 16620
Little Rock, AR 72231
Phone 501-834-3320
Fax 501-834-5416

Date: 9/26/25
Return Request: 10/17/25
Project: Bentonville WRRF
Supplier: Powers of Arkansas
Manufacturer: Cook
Submittal: DF Fans
Submittal Number: 15500-06
Spec Section: HVAC
Drawing #: Mechanical

ENGINEER
Hawkins Weir

GENERAL CONTRACTOR
Crossland Heavy Contractors

ENGINEER
Black and Veatch

MECHANICAL SUBCONTRACTOR
Comfort Systems USA
(Arkansas), Inc.
116 Commercial Ave
Lowell, AR 72745
479-770-8992

Notes:

CSUSA PROJECT NO.
25-5027
jzuber@comfortar.com

4806 Rixey Road
No. Little Rock, AR 72117

M-15500-001-A

CREATING CUSTOMERS FOR LIFE

POWERS

IOM

PRODUCT	DF Duct Fans
SPECIFICATION	15500.C.11, pg.14
MANUFACTURER	Loren Cook
JOB NAME	Bentonville Water Res Recovery Facility Impvts #2021037
LOCATION	Bentonville, AR
ENGINEER	Hawkins Weir
CONTRACTOR	Knight & Wilson
DATE	9/20/2025
SUBMITTED BY	Chris Atwood
LEAD TIME	7 Weeks

5440 Northshore Drive - North Little Rock, Arkansas 72118 - Tel: 501.374.5420 Fax: 501.370.9298

This publication contains the installation, operation and maintenance instructions for standard units of the *SQN: Centrifugal Square Inline Fans.*

Carefully read this publication and any supplemental documents prior to any installation or maintenance procedure.

Loren Cook catalog, *SQN,* provides additional information describing the equipment, fan performance, available accessories and specification data.

For additional safety information, refer to AMCA Publication 410-96, *Safety Practices for Users and Installers of Industrial and Commercial Fans*.

All of the publications listed above can be obtained from:

- lorencook.com
- *info@lorencook.com*
- 417-869-6474 ext. 166

For information and instructions on special equipment, contact Loren Cook Company at 417-869-6474.

Receiving

Inspection

Immediately, upon receipt of an SQN fan, carefully inspect the fan and accessories for damage and shortage.

- Turn the wheel by hand to ensure it turns freely and does not bind.
- Inspect dampers for free operation of all moving parts
- Record on the Delivery Receipt any visible sign of damage.

Handling

Lift the fan by the lifting holes.

NOTICE! Never lift by the shaft, motor or housing.

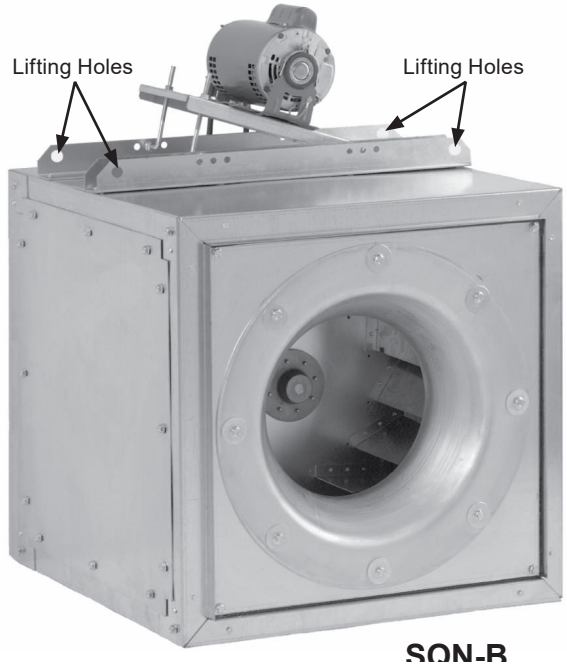

SQN-B

⚠WARNING

Rotating Parts & Electrical Shock Hazard:

Fans should be installed and serviced by qualified personnel only.

Disconnect electric power before working on unit (prior to removal of guards or entry into access doors).

Follow proper lockout/tagout procedures to ensure the unit cannot be energized while being installed or serviced.

A disconnect switch should be placed near the fan in order that the power can be swiftly cut off, in case of an emergency and in order that maintenance personnel are provided complete control of the power source.

Grounding is required. All field-installed wiring must be completed by qualified personnel. All field installed wiring must comply with National Electric Code (NFPA 70) and all applicable local codes.

Fans and blowers create pressure at the discharge and vacuum at the inlet. This may cause objects to get pulled into the unit and objects to be propelled rapidly from the discharge. The discharge should always be directed in a safe direction and inlets should not be left unguarded. Any object pulled into the inlet will become a projectile capable of causing serious injury or death.

When air is allowed to move through a non-powered fan, the impeller can rotate, which is referred to as windmilling. Windmilling will cause hazardous conditions due to unexpected rotation of components. Impellers should be blocked in position or air passages blocked to prevent draft when working on fans.

Friction and power loss inside rotating components will cause them to be a potential burn hazard. All components should be approached with caution and/or allowed to cool before contacting them for maintenance.

Under certain lighting conditions, rotating components may appear stationary. Components should be verified to be stationary in a safe manner, before they come into contact with personnel, tools or clothing.

Failure to follow these instructions could result in death or serious injury.

The attachment of roof mounted fans to the roof curb as well as the attachment of roof curbs to the building structure must exceed the structural requirements based on the environmental loading derived from the applicable building code for the site. The local code official may require variations from the recognized code based on local data. The licensed engineer of record will be responsible for prescribing the correct attachment based on construction materials, code requirements and environmental effects specific to the installation.

Storage

If the fan is stored for any length of time prior to installation, completely fill the bearings with grease or moisture-inhibiting oil. Refer to *Lubricants* on page 5. Also, store the fan in its original crate and protect it from dust, debris and the weather.

To maintain good working condition of an SQN when it is stored outdoors, or on a construction site, follow the additional steps below:

- Cover the inlet and outlet, and belt tunnel opening to prevent the accumulation of dirt and moisture in the housing.
- Periodically rotate the wheel and operate dampers (if supplied) to keep a coating of grease on all internal bearing parts.
- Periodically inspect the unit to prevent damaging conditions.

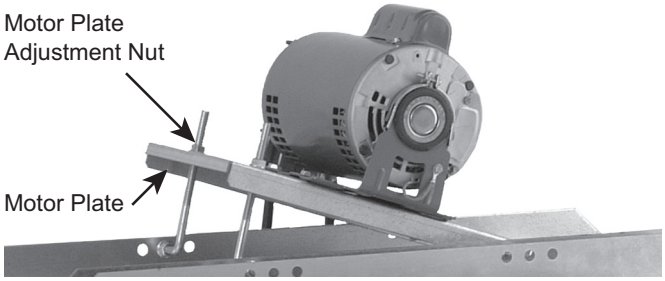

Motor Plate Adjustment

Wiring Diagrams

Vari-Flow

For EC or VF see EC Motor Wiring supplement. For VF2 see PM wiring supplement.

Single Speed, Single Phase Motor

When ground is required, attach to ground A or B with no. 6 thread forming screw. To reverse, interchange T-1 and T-4.

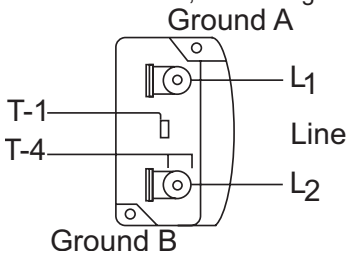

2 Speed, 2 Winding, Single Phase Motor

When ground required, attach to ground A or B with No. 6 thread forming screw. To reverse, interchange T-1 and T-4 leads.

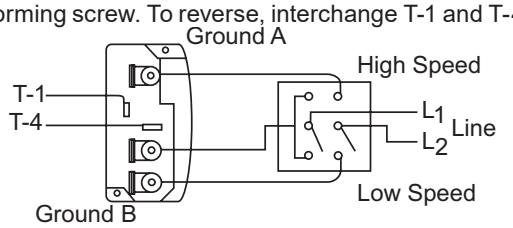

Single Speed, Single Phase, Dual Voltage

When ground required, attach to ground A or B with No. 6 thread forming screw. To reverse, interchange T-5 and J-10 leads.

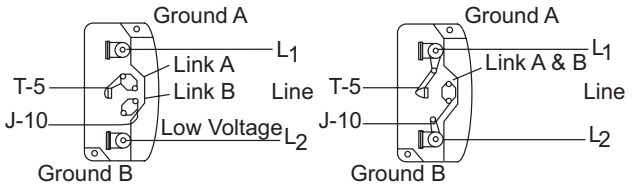

3 Phase, 9 Lead Motor Y-Connection

To reverse, interchange any 2 line leads.

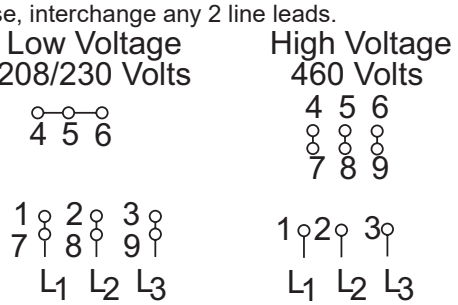

3 Phase, 9 Lead Motor Delta-Connection

To reverse, interchange any 2 line leads.

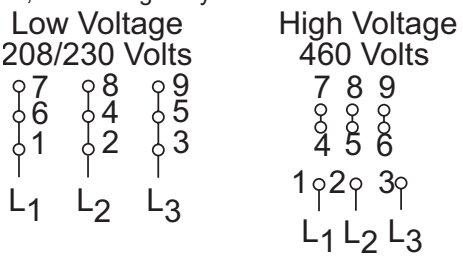

2 Speed, 1 Winding, 3 Phase Motor

To reverse, interchange any 2 line leads. Motors require magnetic control.

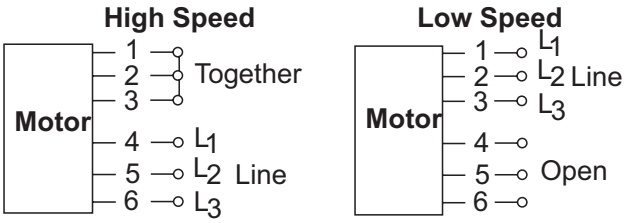

2 Speed, 2 Winding, 3 Phase

To reverse: High Speed-interchange leads T11 and T12. Low Speed-interchange leads T1 and T2. Both Speeds-interchange any 2 line leads.

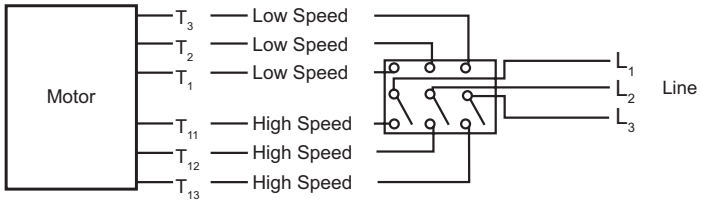

Typical Damper Motor Schematic

For 3 phase, damper motor voltage should be the same between L_1 and L_2. For single phase application, disregard L_3. *Damper motors may be available in 115, 230 and 460 volt models. The damper motor nameplate voltage should be verified prior to connection. **A transformer may be provided in some installations to correct the damper motor voltage to the specified voltage.

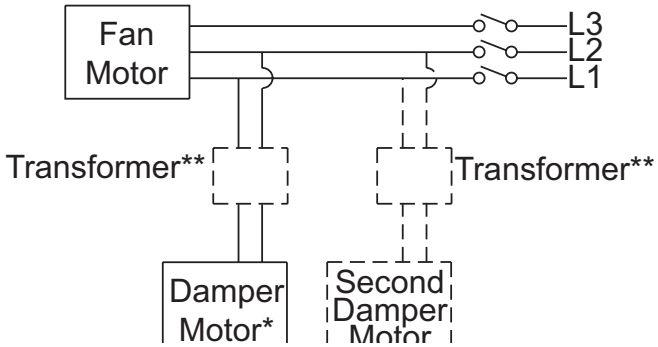

SQI-D 70–90

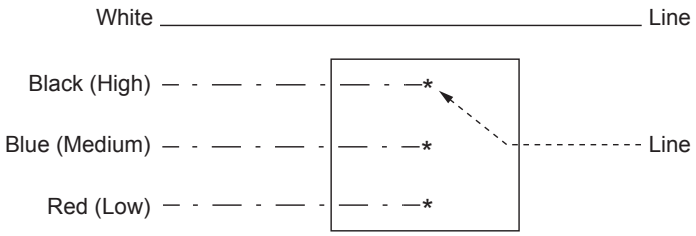

NOTE: Insulate unused leads separately; leads are located at the motor inside the unit.

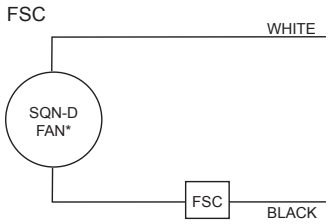

*See SQN Wiring Diagram for correct lead.

Installation

Motor Installation

To prevent damage to the fan during shipping, motors 3 HP and larger, and extremely heavy motors (cast iron or severe duty) are shipped loose and must be field mounted.

Wiring Installation

All wiring should be in accordance with local ordinances and the National Electrical Code, NFPA 70. Ensure the power supply (voltage, frequency, and current carrying capacity of wires) is in accordance with the motor nameplate. Refer to the *Wiring Diagrams* section.

Follow the wiring diagram in the disconnect switch and the wiring diagram provided with the motor. Correctly label the circuit on the main power box and always identify a closed switch to promote safety (i.e., red tape over a closed switch).

Direct Drive

Wire the electrical box on the blower housing.

Belt Drive

The motor can be wired directly since the motor is external to the fan.

Leave enough slack in the wiring to allow for motor movement when adjusting belt tension. Some fractional motors have to be removed in order to make the connection with the terminal box at the end of the motor. To remove motor, remove bolts securing motor base to power assembly. Do not remove motor mounting bolts.

Belt and Pulley Installation

If your fan is a direct drive, proceed to *Blower Installation*.

Belt tension is determined by the sound the belts make when the fan is first started. Belts will produce a loud squeal which dissipates after the fan is operating at full capacity. If the belt tension is too tight or too loose, lost efficiency and possible damage can occur.

Figure 1

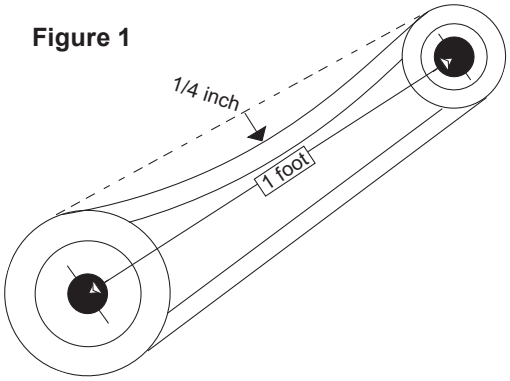

Do not change the pulley pitch diameter to change tension. This will result in a different fan speed.

1. Loosen motor plate adjustment nuts on L-bolts and move motor plate in order that the belts can easily slip into the grooves on the pulleys. Never pry, roll, or force the belts over the rim of the pulley.
2. Adjust the motor plate until proper tension is reached. For proper tension, a deflection of approximately 1/4” per foot of center distance should be obtained by firmly pressing the belt. Refer to *Figure 1*.
3. Lock the motor plate adjustment nuts in place.
4. Ensure pulleys are properly aligned.

Figure 2

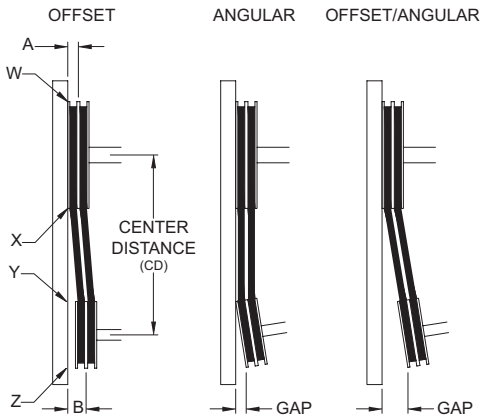

Tolerance

Center Distance	Maximum Gap
Up thru 12”	1/16”
12” up through 48	1/8”
Over 48”	1/4”

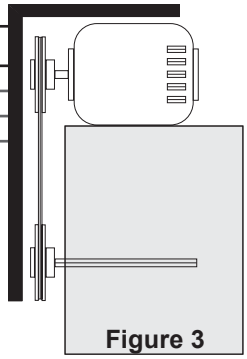

Figure 3

Pulley Alignment

Pulley alignment is adjusted by loosening the motor pulley setscrew and by moving the motor pulley on the motor shaft.

Figure 2 indicates where to measure the allowable gap for the drive alignment tolerance. All contact points (indicated by WXYZ) are to have a gap less than the tolerance shown in the table. When the pulleys are not the same width, the allowable gap must be adjusted by half of the difference in width. *Figure 3* illustrates using a carpenter’s square to adjust the position of the motor pulley until the belt is parallel to the longer leg of the square.

Blower Installation

The fan is shipped with the motor in the 12 o'clock position and the feet are shipped loose. (Feet may be under weather cover)

1. Upon receipt of the fan, remove the eight (8) feet shipped with the fan and ensure the feet are the correct type. Refer to *Figure 4*.
2. Determine how the fan is to be mounted. Refer to *Foot Mounting Illustrations*.
3. Remove the 5/16" bolt(s) from the corner of the housing in which the foot is to be attached.
4. Place the foot over the open bolt hole(s) and bolt the foot to the unit. Refer to *Figure 4*.

Foot Mounting Illustrations

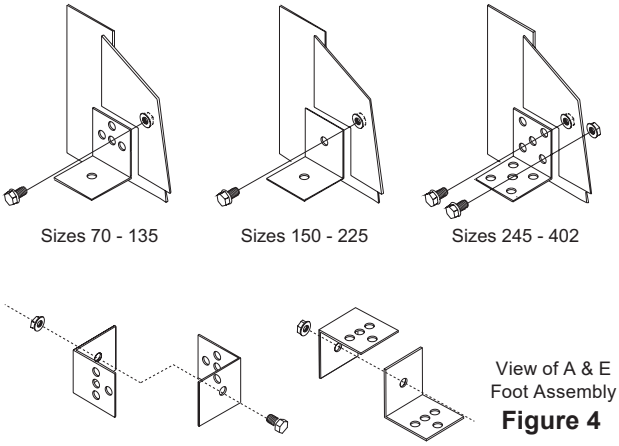

Figure 4

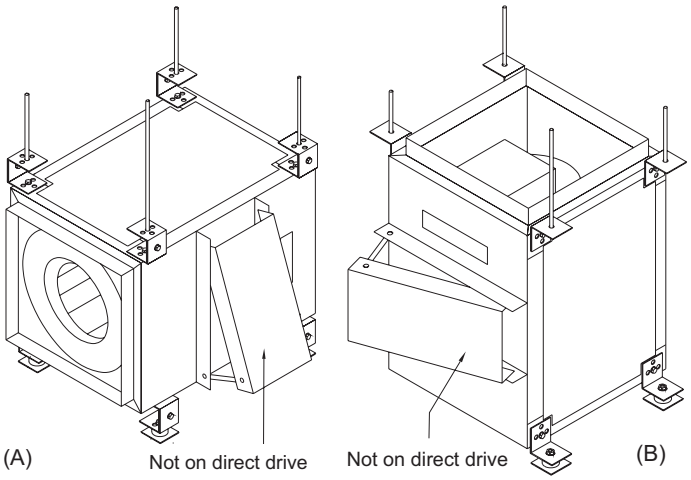

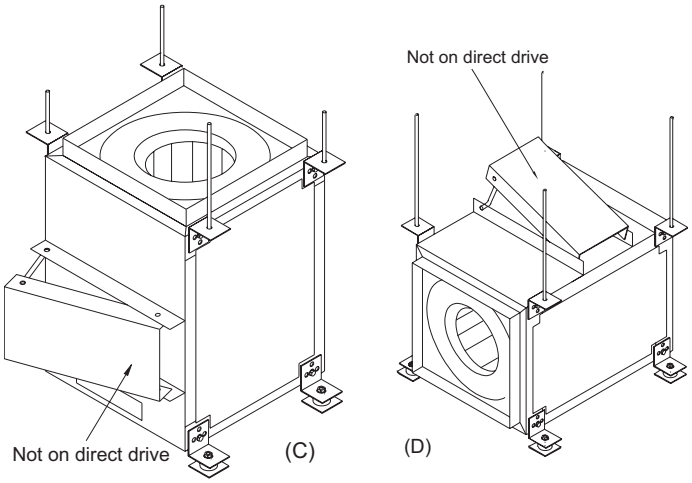

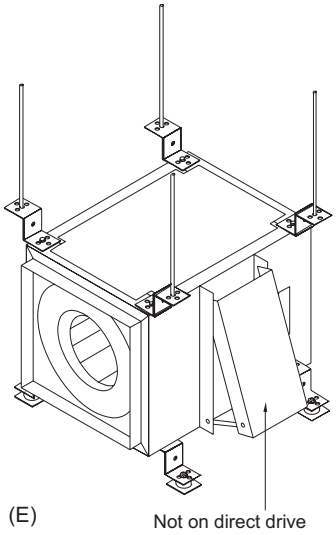

SQN Optional Side Discharge Installation

Upon receiving an SQN for a side discharge installation, please note that the rear discharge block-off panel is installed on the unit and that the correct number of side discharge duct connection collars are provided (4 steel flanges for a single side discharge and 8 for dual).

To install the side discharge duct connection collar, remove the appropriate access door. Install the side discharge duct connection collar using the bolts that were removed with the access door. Then connect the duct work. See page 6 for examples.

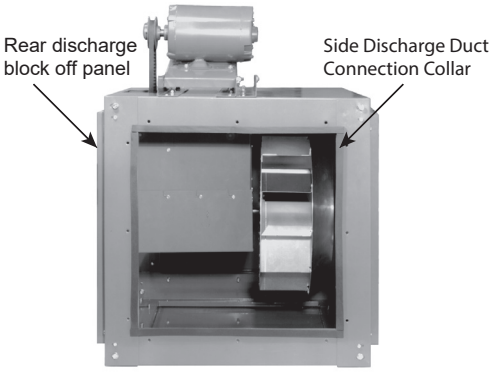

NOTICE! Original Loren Cook Company labels must remain with the unit. This may require swapping access doors from one side to the other.

Final Installation Steps

1. Ensure that all accessories are installed.
2. Ensure that the blower is secured to ductwork.
3. Inspect wheel-to-inlet clearance. Ensure wheel does not rub against the inlet.
4. Test the fan to ensure the rotation of the wheel is the same as indicated by the rotation label.
5. Inspect for correct amperage with an ammeter and correct voltage with a voltmeter.

Typical Side Discharge Applications

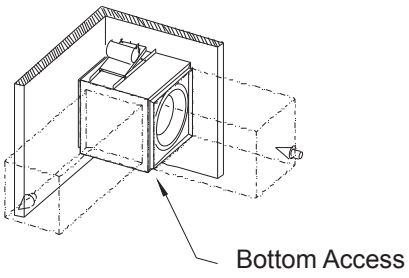

Example 1

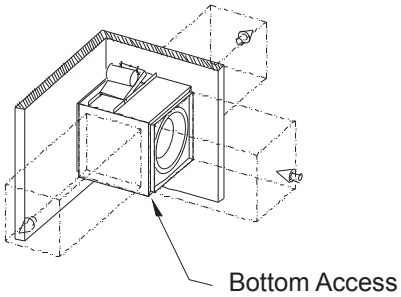

Example 2

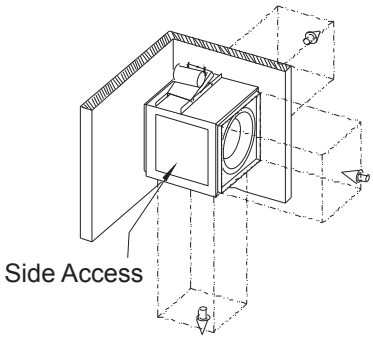

Example 3

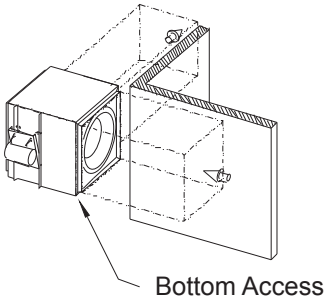

Example 4

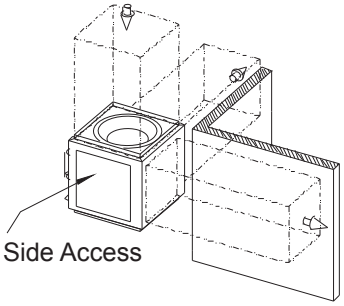

Example 5

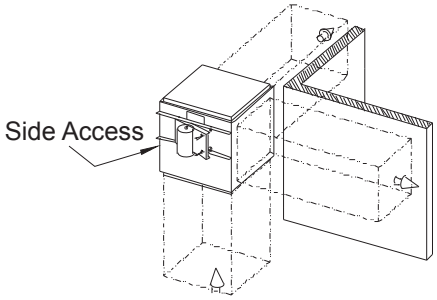

Example 6

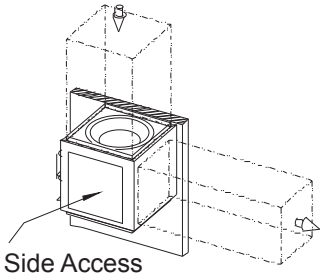

Example 7

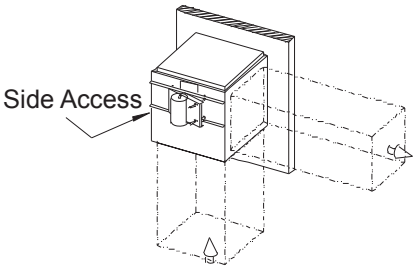

Example 8

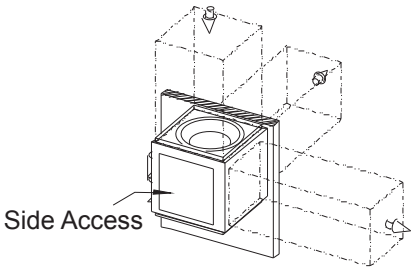

Example 9

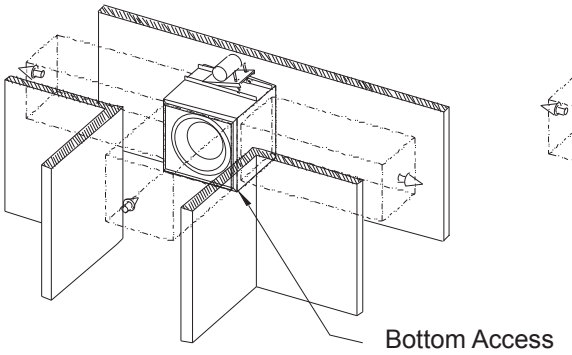

Example 10

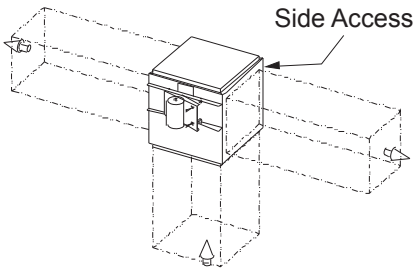

Example 11

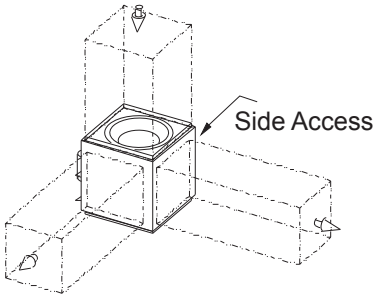

Example 12

Operation

Pre-Start Checks

1. Lock out all the primary and secondary power sources.
2. Inspect and tighten fasteners and setscrews, particularly fan mounting and bearing fasteners. Refer to *Recommended Torque* chart.
3. Inspect belt tension and pulley alignment.
4. Inspect motor wiring.
5. Ensure fan and ductwork are clean and free of debris.
6. Close and secure all access doors.
7. Restore power to the fan.

Recommended Torque for Setscrews/Bolts (IN-LB)

Setscrews				Hold Down Bolts	
Size	Key Hex Across Flats	Recommended Torque		Size	Recommended Torque
		Min.	Max.		
#8	5/64”	15	21	3/8”-16	324
#10	3/32”	27	33	1/2”-13	780
1/4	1/8”	70	80	5/8”-11	1440
5/16	5/32”	140	160	3/4”-10	2400
3/8	3/16”	250	290	7/8”-9	1920
7/16	7/32”	355	405	1”-8	2700
1/2	1/4”	560	640	1-1/8”-7	4200
5/8	5/16”	1120	1280	1-1/4”-7	6000
3/4	3/8”	1680	1920	-	-
7/8	1/2”	4200	4800	-	-
1	9/16”	5600	6400	-	-

Start Up

Turn the fan on. In variable speed units, set the fan to its lowest speed and inspect for the following:

- Direction of rotation.
- Excessive vibration.
- Unusual noise.
- Bearing noise.
- Improper belt alignment or tension (listen for squealing).
- Improper motor amperage or voltage.

If a problem is discovered, immediately shut the fan off. Lock out all electrical power and check for the cause of the trouble. See Troubleshooting section.

Inspection

Inspection of the fan should be conducted at the first 30 minute, 8 hour and 24 hour intervals of satisfactory operation. During the inspections, stop the fan and inspect as per the chart below.

30 Minute Interval

Inspect bolts, setscrews, and motor mounting bolts. Adjust and tighten as necessary.

8 Hour Interval

Inspect belt alignment and tension. Adjust and tighten as necessary.

24 Hour Interval

Inspect belt tension. Adjust and tighten as necessary.

Maintenance

Establish a schedule for inspecting all parts of the fan. The frequency of inspection depends on the operating conditions and location of the fan.

Inspect fans exhausting corrosive or contaminated air within the first month of operation. Fans exhausting contaminated air (airborne abrasives) should be inspected ev-

Yearly inspections are recommended for fans exhausting non-contaminated air.

It is recommended the following inspections be conducted twice per year

1. Inspect bolts and setscrews for tightness. Tighten as necessary. Refer to *Recommended Torque* chart.
2. Inspect belt wear and alignment. Replace worn belts with new belts and adjust alignment as needed. Refer to *Belt and Pulley Installation*
3. Bearings should be inspected as recommended in the *Conditions* chart
4. Inspect for cleanliness. Clean exterior surfaces only. Removing dust and grease on motor housing assures proper motor cooling.

Fan Bearings

NOTICE! The fan bearings are provided prelubricated. Any specialized lubrication instructions on fan labels supersedes information provided herein. Bearing grease is a petroleum lubricant in a lithium base conforming to an NLGI #2 consistency. If user desires to utilize another type of lubricant, they take responsibility for flushing bearings and lines, and maintaining a lubricant that is compatible with the installation.

Bearings should be relubricated in accordance with the condition chart below.

For best results, lubricate the bearing while the fan is in operation. Pump grease in slowly until a slight bead forms around the bearing seals. Excessive grease can damage seal and reduce life through excess contamination and/or loss of lubricant.

In the event that the bearing cannot be seen, use no more than three injections with a hand operated grease gun.

Conditions Chart

RPM	Temp °F	Greasing Interval
Up to 1000	-30 to 120	6 months
	120 to 200	2 months
1000 to 3000	-30 to 120	3 months
	120 to 200	1 month
Over 3000	-30 to 120	1 month
	120 to 200	2 weeks
Any Speed	< -30	Consult Factory
Any Speed	> 200	1 week

For moist or otherwise contaminated installations; divide the interval by a factor of 3. For vertical shaft installations divide the interval by a factor of 2.

Motor Bearings

Motors are provided with prelubricated bearings. Any lubrication instructions shown on the motor nameplate supersede instructions below.

Direct Drive 1050/1075,1200,1300 &1500 rpm units use a prelubricated sleeve bearing that has a oil saturated

wicking material surrounding it. The initial factory lubrication is adequate for up to 10 years of operation under normal conditions. However, it is advisable to add lubricant after 3 years. Use only LIGHT grade mineral oil or SAE 10W oil up to 30 drops. If the unit has been stored for a year or more it is advisable to lubricate as directed above. For units in severe conditions, lubrication intervals should be reduced to half.

Motors without sleeve bearings (as described above) will have grease lubricated ball or roller bearings. Motor bearings without provisions for relubrication will operate up to 10 years under normal conditions with no maintenance. In severe applications, high temperatures or excessive contaminates, it is advisable to have the maintenance department disassemble and lubricate the bearings after 3 years of operation to prevent interruption of service.

For motors with provisions for relubrication, follow intervals of the following table.

Relubrication Intervals

Service Conditions	NEMA Frame Size					
	Up to & including 184T		213T-365T		404T & larger	
	1800 RPM and less	Over 1800 RPM	1800 RPM and less	Over 1800 RPM	1800 RPM and less	Over 1800 RPM
Standard	3 years	6 months	2 years	6 months	1 year	3 months
Severe	1 year	3 months	1 year	3 months	6 months	1 months

The above intervals should be reduced to half for vertical shaft installations.

Motors are provided with a polyurea mineral oil NGLI #2 grease. All additions to the motor bearings are to be with a compatible grease such as Exxon Mobil Polyrex EM and Chevron SRI.

Motor Services

Should the motor prove defective within a one-year period, contact your local Loren Cook representative or your nearest authorized electric motor service representative.

Changing Fan Speed

All belt driven fans with motors up to and including 5 HP are equipped with variable pitch pulleys.

1. Loosen setscrew on motor pulley
2. Open or close the groove facing to change the pitch diameter.
   - Speed Reduction: Open the pulley in order that the belt rests deeper in the groove.
   - Speed Increase: Close the pulley in order that the belt rests higher in the groove. Ensure RPM limits of the fan and the horsepower limits of the motor are maintained.
3. Retighten pulley setscrew on one of the flat areas of the motor shaft.
4. After the adjustment is made, check for proper belt tension. See *Belt and Pulley Installation*.

Maximum RPM

SQN-B Size	Maximum RPM	
	Non-Reinforced Wheel	Reinforced Wheel
60	3795	-
70	4006	-
80	3409	-
100	3243	-
120	2867	-
135	2332	-
150	2099	-
165	1833	2107
180	1610	1786
195	1429	1593
210	1277	1399
225	1152	1459
245	1015	1434
270	876	1226
300	837	1024
330	716	962
365	624	786
402	539	683

SQN-HP Size	Maximum RPM	
	Non Reinforced Wheel	Reinforced Wheel
135	2622	-
150	2929	-
165	2635	-
180	2169	-
195	1955	-
210	1781	-
225	1500	1861
245	1185	1773
270	1025	1563
300	980	1204
330	830	1178
365	735	1038
402	630	970

SQND-XP Size	Maximum RPM
180	2300
195	2100
210	2122
225	1879
245	1520
270	1520
300	1391
330	1182
365	1132

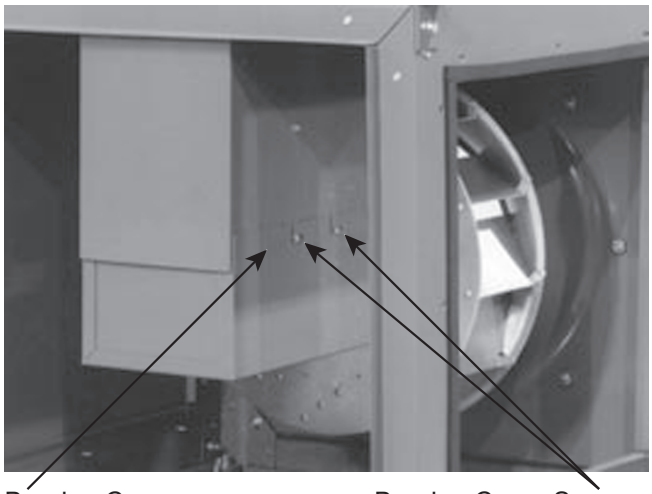

Bearing Cover

Bearing Cover Screws
(Several screws on opposite side not shown in photograph.)

Pulley and Belt Replacement

1. Remove pulleys from their respective shafts.
2. Clean the motor and fan shafts.
3. Clean bores of pulleys and coat the bores with heavy oil.
4. Remove grease, rust, or burrs from the pulleys and shafts.
5. Remove burrs from shaft by sanding.

6. Place fan pulley on fan shaft and motor pulley on its shaft.

   NOTICE! Do not hammer the pulleys onto the shafts because this may damage the bearings.

7. Tighten in place.
8. Install belts on pulleys and align as described in *Belt and Pulley Installation*.

Bearing Replacement

The fan bearings are pillow block ball bearings.

1. Loosen screws on bearing cover.
2. Push bearing cover toward the wheel. As the bearing cover moves toward the wheel it will slide down to reveal the bearings and shaft.
3. Remove the old bearing.
4. Remove any burrs from the shaft by sanding.
5. Slide new bearings onto the shaft to the desired location and loosely mount bearings onto the bearing support. Bearing bolts and setscrews should be loose enough to allow shaft positioning.
6. Correctly position the wheel and tighten the bearing bolts securely to the bearing support.
7. Align setscrews bearing to bearing and secure tightly to the shaft.

   NOTICE! Never tighten both pairs of setscrews before securing bearing mounting bolts. This may damage the shaft.

8. Inspect the wheel position again. If necessary, readjust by loosening the bearing bolts and setscrews and repeat from step 5.

Wheel Replacement

1. Drill two 1/4” diameter holes, 180° apart centered approximately between the shaft and the outside diameter of the hub, 3/8” to 1/2” in depth.
2. Tap 1/4” holes to 5/16” thread with a 5/16” hole tap. Do not drill or tap greater than recommended.
3. Screw the puller arms to the full depth of the threads into the tapped holes. Align center of the puller with the center of the shaft. Ensure all setscrews in the hub, normally two, are fully removed.
4. Slowly remove wheel from the shaft.

Recommended Puller

Lisle No. 45000 Sterling Wheel Puller. This puller is available at most automotive parts retail outlets.

Wheel Replacement Components

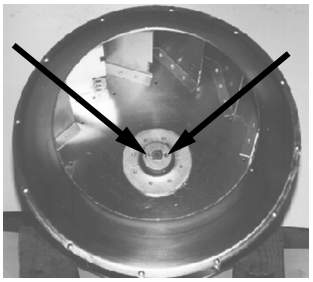

Drilled hole placement.

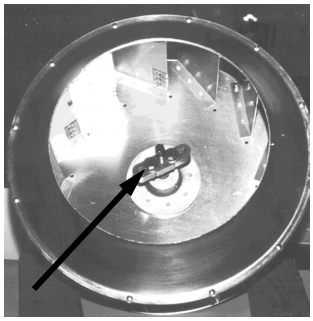

Wheel puller.

Wheel-to-Inlet Clearance

The correct wheel-to-inlet clearance is critical to proper fan performance. This clearance should be verified before initial start-up since rough handling during shipment could cause a shift in fan components. Refer to *Wheel/Inlet* drawing for correct overlap.

Adjust the overlap by loosening the wheel hub and moving the wheel along the shaft to obtain the correct value.

A uniform radial gap (space between the edge of the cone and the edge of the inlet) is obtained by loosening the inlet cone bolts and repositioning the inlet cone.

Wheel/Inlet Overlap

Size	Maximum Overlap
100- 195	5/8”
210-270	3/4”
300-402	1”

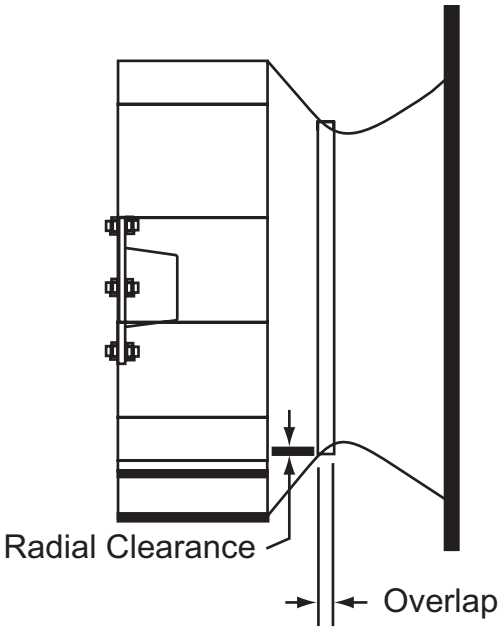

Troubleshooting

Problem and Potential Cause

Low Capacity or Pressure:

- Incorrect direction of rotation. Make sure the fan rotates in same direction as the arrows on the motor or belt drive assembly.
- Poor fan inlet conditions. There should be a straight clear duct at the inlet.
- Improper wheel alignment.

Excessive Vibration and Noise:

- Damaged or unbalanced wheel.
- Belts too loose; worn or oily belts.
- Speed too high.
- Incorrect direction of rotation. Make sure the fan rotates in same direction as the arrows on the motor or belt drive assembly.
- Bearings need lubrication or replacement.
- Fan surge.
- For direct drive, make sure hub setscrew, if available, is tightened down on motor shaft or on key. For direct drive units with bushing, the hub setscrew, if available, needs to go through the bushing and then tightened down on the motor shaft or on key.

Overheated Motor:

- Motor improperly wired.
- Incorrect direction of rotation. Make sure the fan rotates in same direction as the arrows on the motor or belt drive assembly.
- Cooling air diverted or blocked.
- Improper inlet clearance.
- Incorrect fan RPMs.
- Incorrect voltage.

Overheated Bearings:

- Improper bearing lubrication
- Excessive belt tension.

Parts Lists

SQN-B/SQN-HP

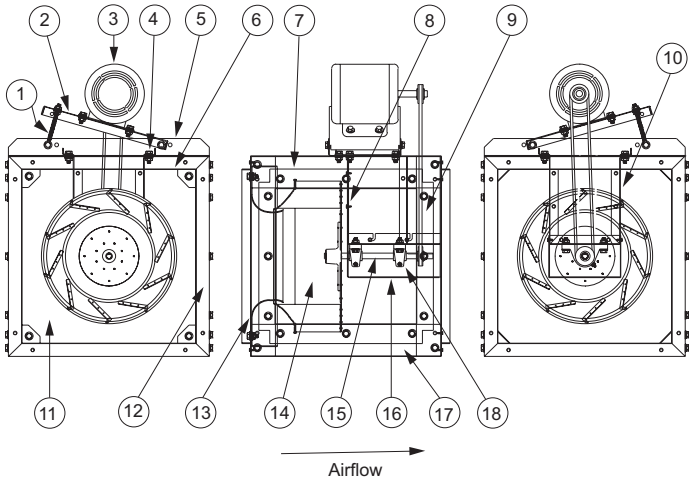

Part No.	Description		
	Sizes 60 - 165	**Sizes 180 - 210**	**Sizes 225 - 402**
1	L-Bolt (2)	L-Bolt (2)	L-Bolt (2)
2	Motor Plate (1)	Motor Plate (1)	Motor Plate (1)
3	Motor (1)	Motor (1)	Motor (1)
4	Motor Support Bracket (2)	Motor Support Bracket (2)	Motor Support Bracket (2)
5	Motor Support Rail (2)	Motor Support Rail (3)	Motor Support Rail (2)
6	Housing Panel Motor Side (1)	Housing Panel Motor Side (1)	Housing Panel Motor Side (1)
7	Access Panel (3)	Access Panel (3)	Access Panel (3)
8	Bearing Support Reinforcement Plate (1)	Bearing Support Reinforcement Plate (1)	Bearing Support Reinforcement Plate (2)
9	Belt Cover (1)	Belt Cover (1)	Belt Cover (1)
10	Bearing Support & Bearing Support Leg	Bearing Support & Bearing Support Leg	Bearing Support & Bearing Support Leg
11	Inlet Panel (1)	Inlet Panel (1)	Inlet Panel (1)
12	Housing Frame Support (6)	Housing Frame Support (6)	Housing Frame Support (6)
13	Inlet Cone, Sizes 135-402 (1)	Inlet Cone, Sizes 135-402 (1)	Inlet Cone, Sizes 135-402 (1)
14	Wheel (1)	Wheel (1)	Wheel (1)
15	Shaft (1)	Shaft (1)	Shaft (1)
16	Bearing Cover (1)	Bearing Cover (1)	Bearing Cover (1)
17	Housing Frame Rail (2)	Housing Frame Rail (2)	Housing Frame Rail (2)
18	Bearing (2)	Bearing (2)	Bearing (2)

SQN-B/SQN-HP Side Discharge

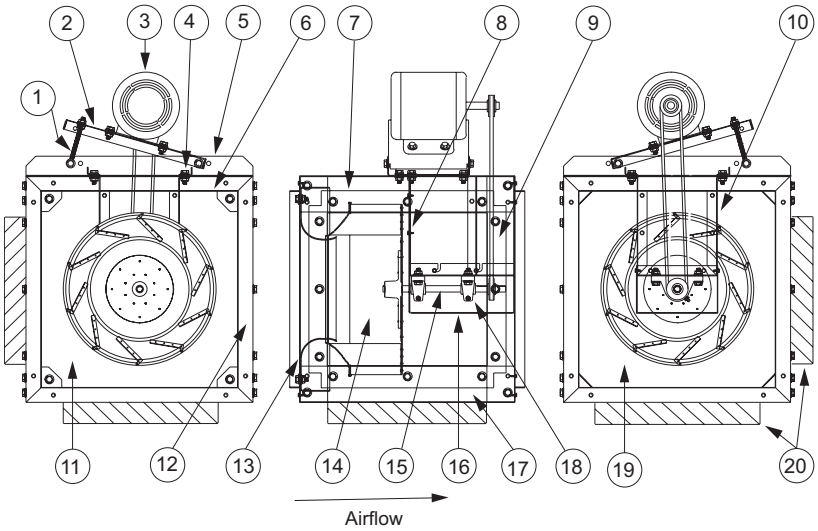

Part No.	Description		
	Sizes 60 - 165	**Sizes 180 - 210**	**Sizes 225 - 402**
1	L-Bolt (2)	**L-Bolt (2)**	L-Bolt (2)
2	Motor Plate (1)	Motor Plate (1)	Motor Plate (1)
3	Motor (1)	Motor (1)	Motor (1)
4	Motor Support Bracket (2)	Motor Support Bracket (2)	Motor Support Bracket (2)
5	Motor Support Rail (2)	Motor Support Rail (3)	Motor Support Rail (2)
6	Housing Panel Motor Side (1)	Housing Panel Motor Side (1)	Housing Panel Motor Side (1)
7	Access Panel (3)	Access Panel (3)	Access Panel (3)
8	Bearing Support Reinforcement Plate (1)	Bearing Support Reinforcement Plate (1)	Bearing Support Reinforcement Plate (2)
9	Belt Cover (1)	Belt Cover (1)	Belt Cover (1)
10	Bearing Support Assembly (1)	Bearing Support Assembly (1)	Bearing Support Assembly (1)
11	Inlet Panel (1)	Inlet Panel (1)	Inlet Panel (1)
12	Housing Frame Support (6)	Housing Frame Support (6)	Housing Frame Support (6)
13	Inlet Cone, Sizes 135 - 402 (1)	Inlet Cone, Sizes 135 - 402 (1)	Inlet Cone, Sizes 135 - 402 (1)
14	Wheel (1)	Wheel (1)	Wheel (1)
15	Shaft (1)	Shaft (1)	Shaft (1)
16	Bearing Cover (1)	Bearing Cover (1)	Bearing Cover (1)
17	Housing Frame Rail (2)	Housing Frame Rail (2)	Housing Frame Rail (2)
18	Bearing (2)	Bearing (2)	Bearing (2)
19	Discharge Cover (1)	Discharge Cover (1)	Discharge Cover (1)
20	Single Side Discharge Flange (4)	Single Side Discharge Flange (4)	Single Side Discharge Flange (4)
	Dual Side Discharge Flange (8)	Dual Side Discharge Flange (8)	Dual Side Discharge Flange (8)

SQN-D Sizes 70 - 165

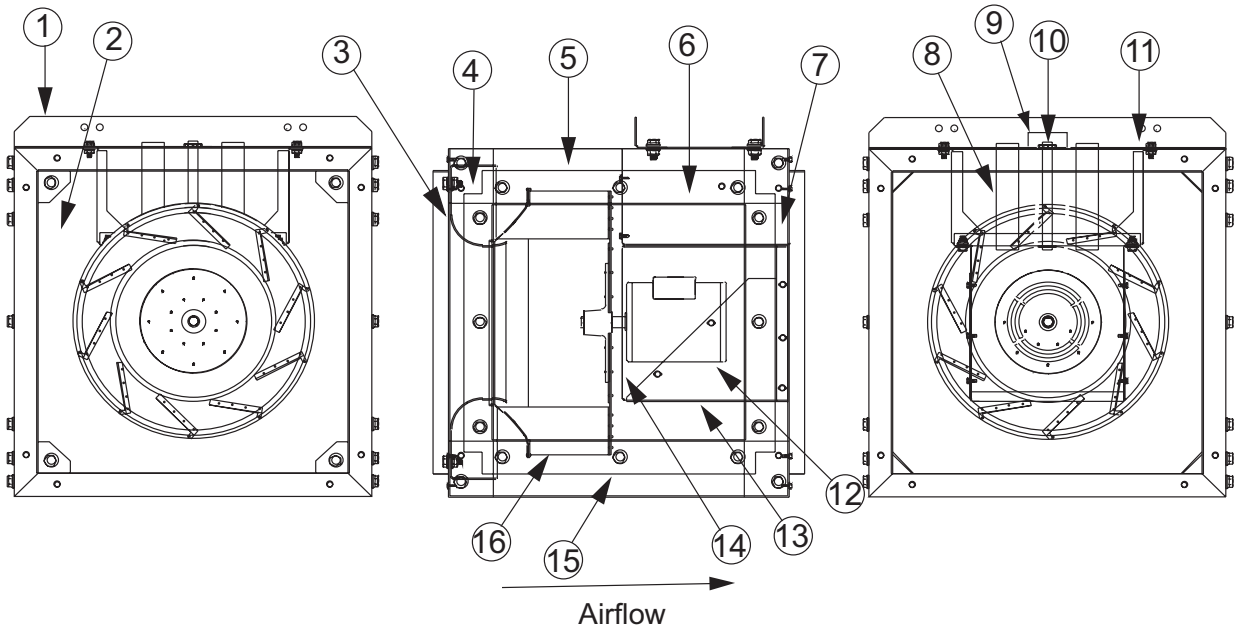

Part No.	Description	Part No.	Description
1	Motor Support Rail (2)	9	Electrical Box
2	Inlet Panel (1)	10	Electrical Conduit (1)
3	Inlet Cone, Sizes 135 - 165 (1)	11	Motor Plate Platform (1)
4	Housing Frame Support (6)	12	Motor (1)
5	Housing Panel Motor Side (1)	13	Motor Cover (1)
6	Access Panel (3)	14	Motor Plate (1)
7	Motor Cover Back Plate (1)	15	Housing Frame Rail (2)
8	Cooling Tube (2)	16	Wheel

SQN-D Sizes 180 - 365

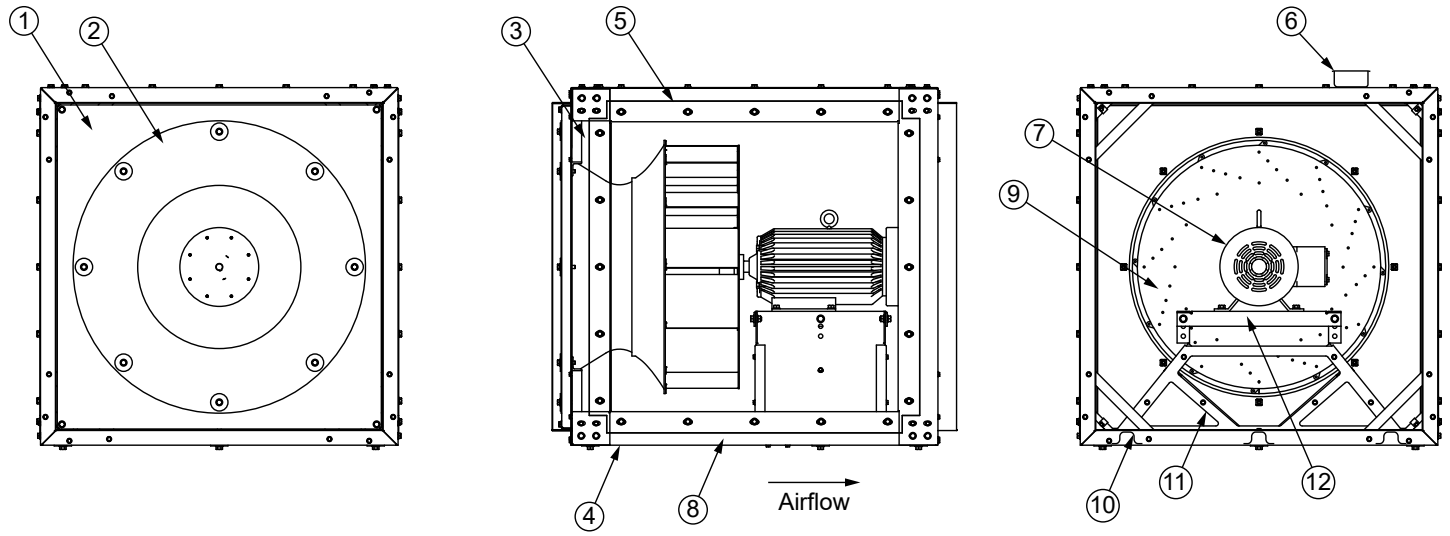

Part No.	Description	Part No.	Description
1	Inlet Panel (1)	9	Wheel
2	Inlet Cone, Sizes 135 - 165 (1)	10	Power Assembly Mounting Rail (3)
3	Housing Frame Support (6)	11	Power Assembly
4	Housing Panel Motor Side (1)	12	Motor Plate
5	Access Panel (3)	13	
6	Electrical Box	14	
7	Motor (1)	15	

SQN-D Side Discharge

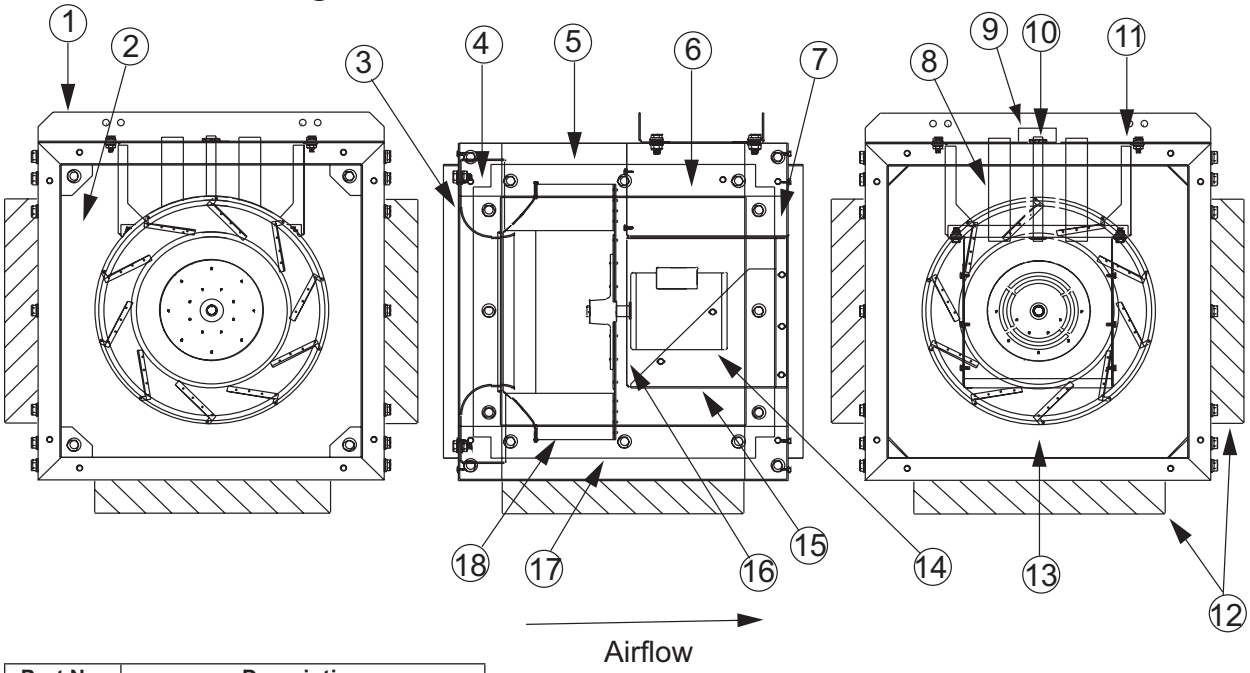

Part No.	Description
1	Motor Support Rail (2)
2	Inlet Panel (1)
3	Inlet Cone, Sizes 135 - 165 (1)
4	Housing Frame Support (6)
5	Housing Panel Motor Side (1)
6	Access Panel (3)
7	Motor Cover Back Plate (1)
8	Cooling Tube (2)
9	Electrical Box
10	Electrical Conduit (1)
11	Motor Plate Platform (1)
12	Single Side Discharge Flange (4)
	Dual Side Discharge Flange (8)
13	Discharge Cover (1)
14	Motor (1)
15	Motor Cover (1)
16	Motor Plate (1)
17	Housing Frame Rail (2)
18	Wheel (1)

Limited Warranty

Loren Cook Company warrants that your Loren Cook fan was manufactured free of defects in materials and workmanship, to the extent stated herein. For a period of one (1) year after date of shipment, we will replace any parts found to be defective without charge, except for shipping costs which will be paid by you. This warranty is granted only to the original purchaser placing the fan in service. This warranty is void if the fan or any part thereof has been altered or modified from its original design or has been abused, misused, damaged or is in worn condition or if the fan has been used other than for the uses described in the company manual. This warranty does not cover defects resulting from normal wear and tear. To make a warranty claim, notify Loren Cook Company, General Offices, 2015 East Dale Street, Springfield, Missouri 65803-4637, explaining in writing, in detail, your complaint and referring to the specific model and serial numbers of your fan. Upon receipt by Loren Cook Company of your written complaint, you will be notified, within thirty (30) days of our receipt of your complaint, in writing, as to the manner in which your claim will be handled. If you are entitled to warranty relief, a warranty adjustment will be completed within sixty (60) business days of the receipt of your written complaint by Loren Cook Company. This warranty gives only the original purchaser placing the fan in service specifically the right. You may have other legal rights which vary from state to state. For fans provided with motors, the motor manufacturer warrants motors for a designated period stated in the manufacturer's warranty. Warranty periods vary from manufacturer to manufacturer. Should motors furnished by Loren Cook Company prove defective during the designated period, they should be returned to the nearest authorized motor ser-vice station. Loren Cook Company will not be responsible for any removal or installation costs.

LOREN COOK COMPANY

Corporate Offices: 2015 E. Dale St. Springfield, MO 65803

Phone 417-869-6474 | Fax 417-862-3820 | lorencook.com