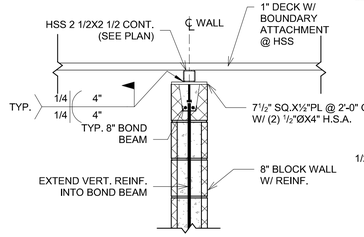

5 TYP. HSS @ TOP OF CMU WALL
3/4" = 1'-0"

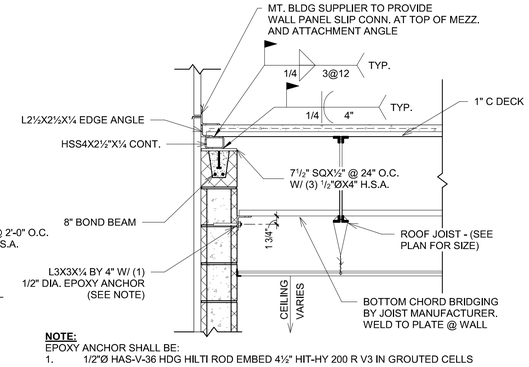

NOTE:
EPOXY ANCHOR SHALL BE:
1. 1/2"Ø HAS-V-36 HDG HILTI ROD EMBED 4½" HIT-HY 200 R V3 IN GROUTED CELLS

4 TYP. JOIST PARALLEL TO EXTERIOR WALL
3/4" = 1'-0"

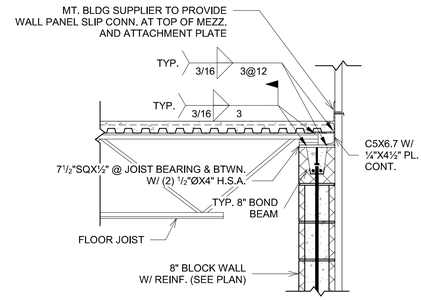

3 TYP. JOIST BEARING AT EXTERIOR WALL SECTION
3/4" = 1'-0"

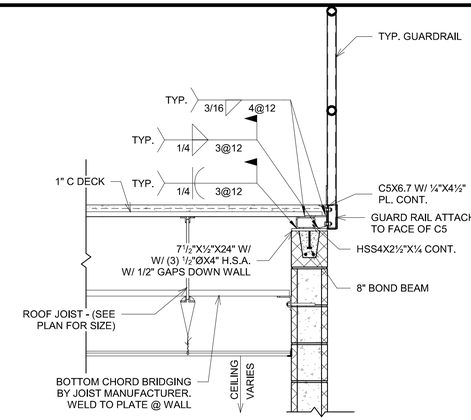

2 TYP. JOIST PARALLEL TO INTERIOR EDGE WALL
3/4" = 1'-0"

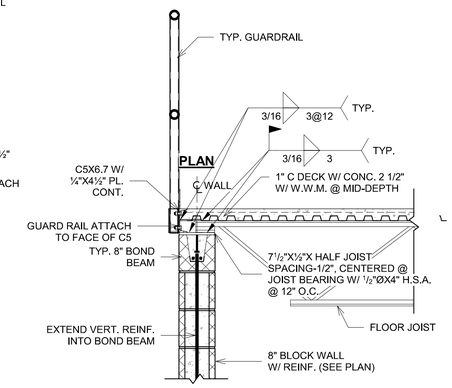

1 TYP. JOIST BEARING AT INTERIOR WALL SECTION
3/4" = 1'-0"

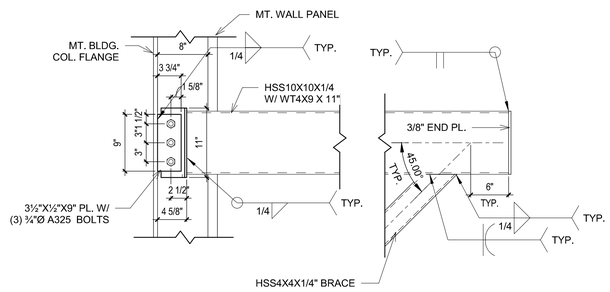

9 TYP. HSS10X4 BM. TO MT. BLDG COL. CONN.
1" = 1'-0"

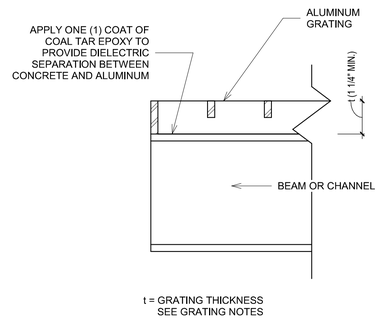

8 ALUMINUM GRATING ON BEAM
3" = 1'-0"

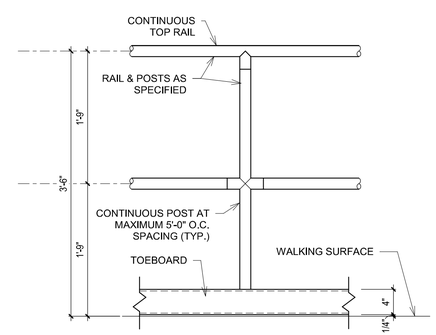

7 ALUMINUM HANDRAIL
1" = 1'-0"

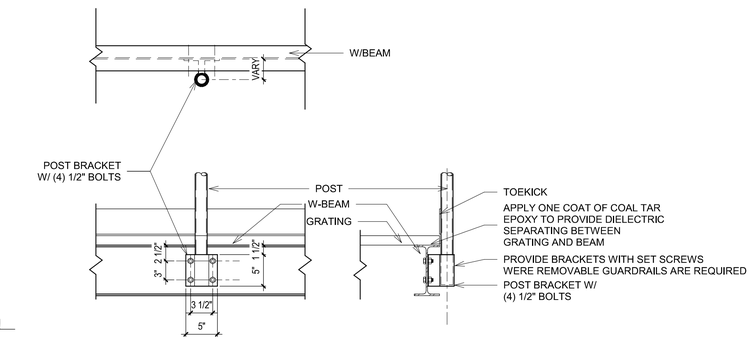

6 SIDE-MOUNTED TO BEAM ALUMINUM HANDRAIL POST
1" = 1'-0"

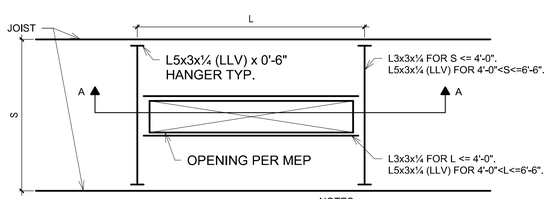

PLAN

NOTES:
1. THE OPENING IN THE DECK SHALL NOT BE CUT AND REMOVED UNTIL NECESSARY.
2. PROVIDE ANGLE SUPPORT UNDER ALL RTU CURBS.

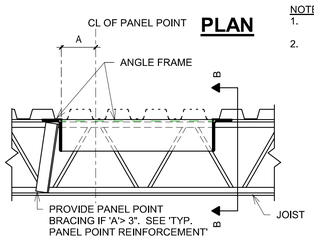

SECTION A-A

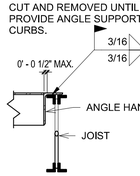

SECTION B-B

MECHANICAL SUPPORT AND LARGE OPENINGS

B TYP. DECK AT OPENINGS
1" = 1'-0"

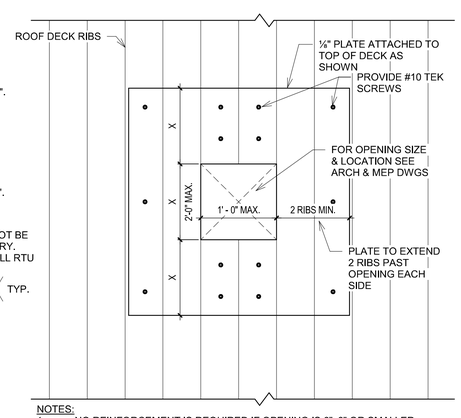

NOTES:
1. NO REINFORCEMENT IS REQUIRED IF OPENING IS 6"x6" OR SMALLER PROVIDED ONLY ONE RIB IS INTERRUPTED.
2. CLUSTERED OPENINGS WITH CLEAR SPACE LESS THAN 1'-0" SHALL BE TREATED AS ONE LARGE OPENING AND PROVIDE THE REINFORCEMENT AS PER DETAIL ABOVE.
3. THIS DETAIL SHALL NOT BE USED TO SUPPORT MECHANICAL EQUIPMENT.

SMALL OPENINGS

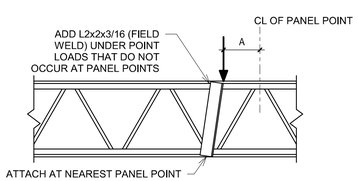

LOAD ON TOP CHORD

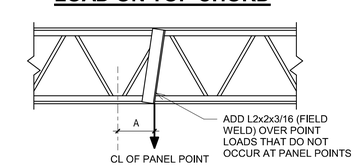

LOAD ON BOTTOM CHORD

NOTES:
1. DIAGONAL BRACE IS NOT REQUIRED FOR "A" LESS THAN THREE INCHES.
2. PROVIDE DIAGONAL BRACE AT CONCENTRATED LOADS SUCH AS: PARTITIONS, HEAVY PIPES, MECH. UNITS, HEAVY LIGHTS OR AT ANY OTHER CONCENTRATED LOADS AND AS NOTED ELSEWHERE IN THE STRUCTURAL DRAWINGS.

A TYP. PANEL POINT REINFORCEMENT
1" = 1'-0"

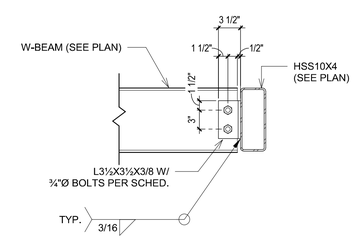

11 TYP. W-BEAM TO HSS10 CONN.
1" = 1'-0"

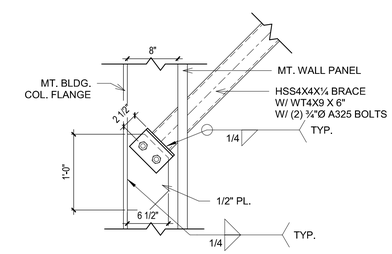

10 TYP. HSS4X4 BRACE. TO MT. BLDG COL. CONN.
1" = 1'-0"

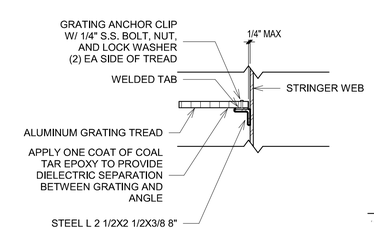

13 ALUMINUM GRATED STAIR TREAD DETAIL
1" = 1'-0"

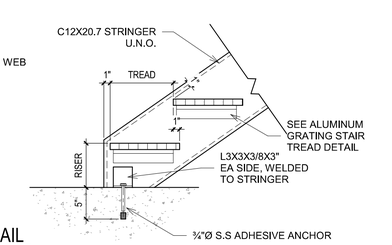

12 STRINGER BASE CONNECTION AT CONCRETE SLAB
1" = 1'-0"

1"
ONE INCH AT FULL SIZE IF NOT ONE INCH SCALE ACCORDINGLY

DATE	REVISION

©HAWKINS-WEIR ENGINEERS, INC. 2024

STATE OF ARKANSAS LICENSED PROFESSIONAL ENGINEER No. 14516 JOHN M. RIORDAN 8/30/2024

HAWKINS WEIR ENGINEERS, INC.
CORNERSTONE STRUCTURAL ENGINEERING, INC.

ROGERS POLLUTION CONTROL FACILITY (PCF)
SOLIDS HANDLING IMPROVEMENTS, PHASE II
Rogers, Arkansas

DRYER BUILDING FRAMING DETAILS

ROGERS WATER UTILITIES

DATE:	AUGUST 2024
SCALE:	As indicated
DESIGNED BY:	JMR
DRAWN BY:	TPL
HWEI NO.:	2020043
FILENAME:	SA-10

SHEET NO.
SA-10

Autodesk Docs://CSE23068 HW Rogers PCF Phase2 SH Improv/406493-Solids Building-CSE.rvt
8/26/2024 10:05:26 AM / TPL / FRAMING DETAILS