FOUNDATION SCHEDULE				
	DIMENSIONS			
FTG MARK	LENGTH	WIDTH	THICK.	REINFORCEMENT
F4A	4' - 0"	4' - 0"	1' - 6"	#5 @ 12" O.C. EA. WAY, TOP & BOT.
F4X4B	4' - 0"	4' - 0"	2' - 0"	#5 @ 12" O.C. EA. WAY, TOP & BOT.
F5A	5' - 0"	5' - 0"	1' - 6"	#5 @ 12" O.C. EA. WAY, TOP & BOT.
F5B	5' - 0"	5' - 0"	2' - 0"	#5 @ 12" O.C. EA. WAY, TOP & BOT.
F5X3B	5' - 0"	3' - 0"	2' - 0"	#5 @ 12" O.C. EA. WAY, TOP & BOT.
F7A	7' - 0"	7' - 0"	1' - 6"	#5 @ 12" O.C. EA. WAY, TOP & BOT.
F7X5	7' - 0"	5' - 0"	2' - 6"	
F8	8' - 0"	8' - 0"	2' - 0"	#5 @ 12" O.C. EA. WAY, TOP & BOT.
F9A	9' - 0"	9' - 0"	1' - 6"	#5 @ 12" O.C. EA. WAY, TOP & BOT.
F10B	10' - 0"	10' - 0"	2' - 0"	#5 @ 12" O.C. EA. WAY, TOP & BOT.
F12B	12' - 0"	12' - 0"	2' - 0"	#5 @ 12" O.C. EA. WAY, TOP & BOT.

CONT. FOOTING SCHEDULE				
FOUND.	DIMENSIONS			
MARK	WIDTH	THICK	TOE	REINFORCEMENT
CF2	2' - 0"	1' - 0"		#5 @ 12" O.C. EA. WAY, TOP AND BOT.
CF3	3' - 0"	1' - 0"		#5 @ 12" O.C. EA. WAY, TOP AND BOT.
CF3.3	3' - 4"	1' - 0"		#5 @ 12" O.C. EA. WAY, TOP AND BOT.
CF3A	3' - 0"	1' - 6"		#5 @ 12" O.C. EA. WAY, TOP AND BOT.
CF5A	5' - 0"	1' - 6"		#5 @ 12" O.C. EA. WAY, TOP AND BOT.
CF7B	7' - 0"	2' - 0"		#5 @ 12" O.C. EA. WAY, TOP AND BOT.
RF4A	4' - 0"	1' - 6"	2' - 0"	#5 @ 12" O.C. EA. WAY, TOP AND BOT.
RF4B	4' - 0"	2' - 0"	2' - 0"	#5 @ 12" O.C. EA. WAY, TOP AND BOT.

PEDESTAL SCHEDULE								
	DIMENSIONS			VERTICAL REINF.		TIES		
PED. MARK	LENGTH (IN)	WIDTH (IN)	T.O.P. ELEV.	NO	SIZE	SIZE	SP.	REMARKS
P1	22"	18"	104' - 0"	6	#5	#4	12	PROVIDE (2) #4 TIES IN TOP 6"
P2	24"	24"	104' - 0"	8	#6	#4	12	PROVIDE (2) #4 TIES IN TOP 6"
P3	36"	24"	104' - 0"	12	#6	#4	12	PROVIDE (2) #4 TIES IN TOP 6"

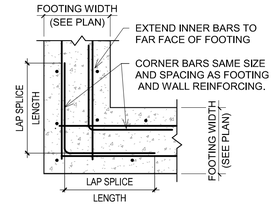

A TYP. CORNER FOOTING DETAIL
3/4" = 1'-0"

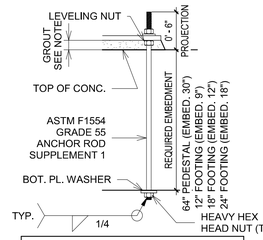

ANCHOR BOLT TABLE				
ANCHOR SIZE	HOLE SIZE	EMBED DEPTH	WASHER SIZE	BOT. PL. SIZE
3/4"	1 5/16"	30"	2"Ø X 1/4"	2 1/2"Ø X 1/2"

1. WASHERS AND BOT. PLATE MAY BE SQUARE OF MIN. A572-GR 50 MATERIAL.
2. NON-SHRINK 5,000 PSI GROUT SHALL BE 1-1/2" THICK U.N.O.
3. "J" BOLTS ARE NOT ACCEPTED.
4. **THESE EMBEDMENT LENGTHS PROVIDED FOR BIDDING PURPOSES FINAL EMBEDMENT LENGTHS MUST BE CHECKED AGAINST FINAL METAL BUILDING MANUFACTURER'S COLUMN REACTIONS**

B TYP. ANCHOR MT. BLDG. BOLT W/ LEVELING NUT
1" = 1'-0"

STRUCTURAL STEEL COLUMN SCHEDULE	
COL MARK	TYPE
C1	HSS4X4X1/4
C2	HSS4X4X1/2
C3	HSS5X5X1/4
C4	HSS6X6X1/4
C5	HSS6X6X3/8

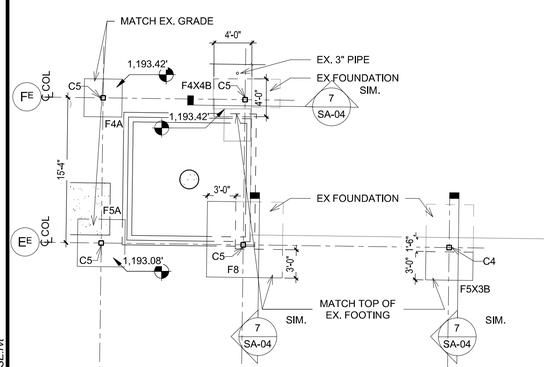

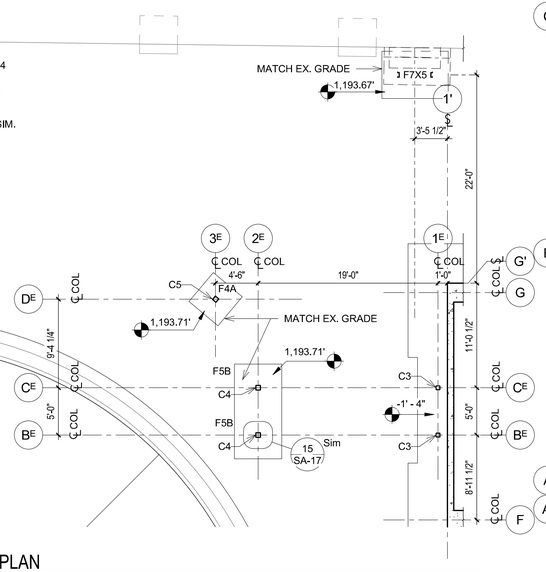

PLAN NOTES:

1. FOUNDATIONS NOT ASSOCIATED WITH NEW OR EXISTING BUILDING FOUNDATION ARE TO BE SET AT OR NEAR FINISHED GRADE AND TOP OF FOUNDATION TO BE TAPERED TO MATCH EXISTING GRADE. CONTRACTOR SHALL VERIFY FOUNDATION ELEVATIONS SHOWN.
2. CONTRACTOR TO VERIFY EXISTING DRYER BUILDING'S FOUNDATION ELEVATIONS AND DIMENSIONS.
3. CONTRACTOR SHOULD HYDRO EXCAVATE SOILS FOR NEW SITE FOUNDATIONS TO AVOID DAMAGING UTILITIES. CONTRACTOR SHOULD NOTE THAT GAS, ELECTRICAL AND WATER LINES ARE ON THE WEST SIDE OF THE EXISTING DRYER BUILDING. CARE SHOULD BE TAKEN DURING THE FOUNDATION EXCAVATION.

2 EXTERIOR EQUIPMENT PLATFORM FOUNDATION PLAN
1/8" = 1'-0"

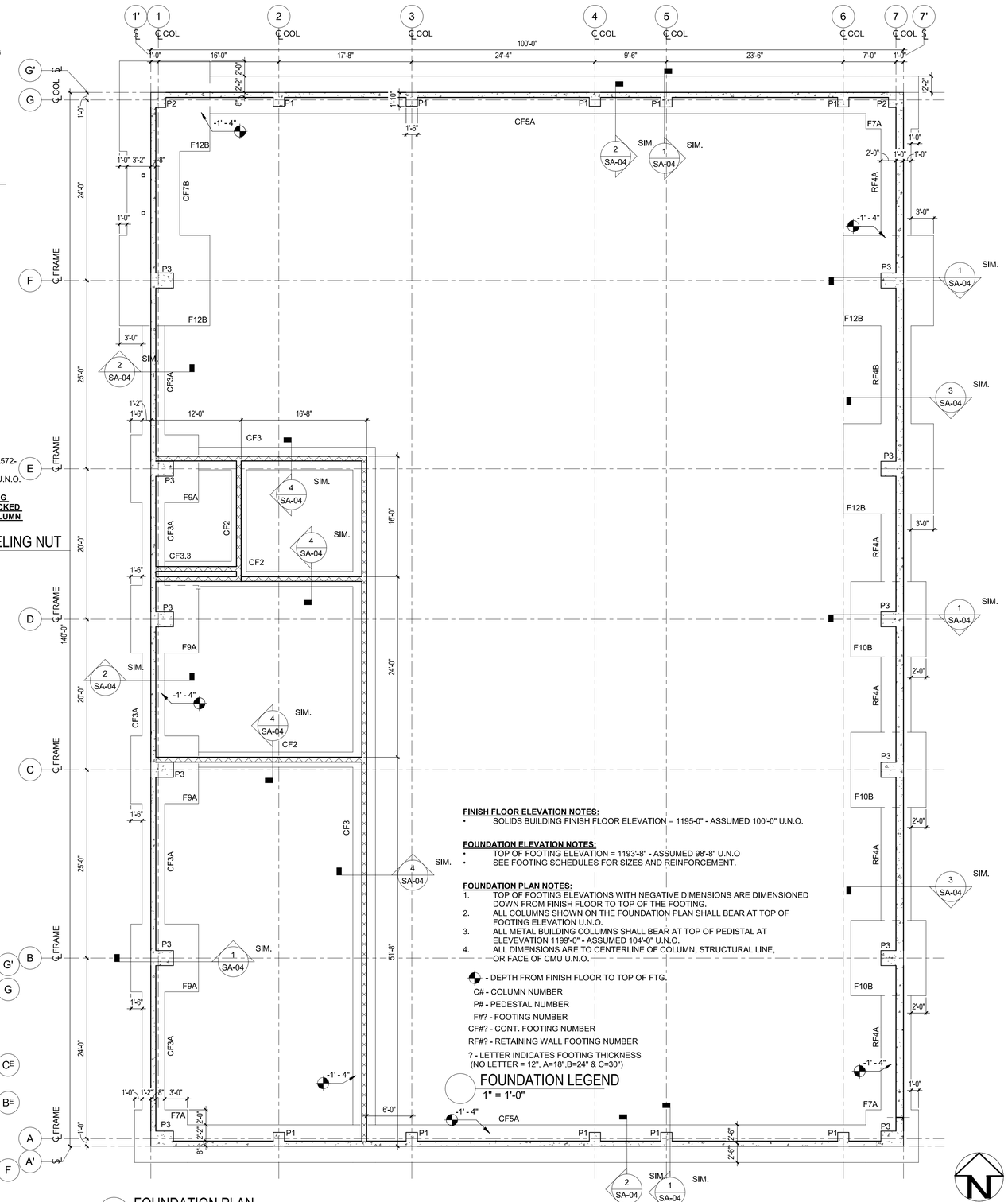

FINISH FLOOR ELEVATION NOTES:

- SOLIDS BUILDING FINISH FLOOR ELEVATION = 1195-0" - ASSUMED 100'-0" U.N.O.

FOUNDATION ELEVATION NOTES:

- TOP OF FOOTING ELEVATION = 1193'-8" - ASSUMED 98'-8" U.N.O
- SEE FOOTING SCHEDULES FOR SIZES AND REINFORCEMENT.

FOUNDATION PLAN NOTES:

1. TOP OF FOOTING ELEVATIONS WITH NEGATIVE DIMENSIONS ARE DIMENSIONED DOWN FROM FINISH FLOOR TO TOP OF THE FOOTING.
2. ALL COLUMNS SHOWN ON THE FOUNDATION PLAN SHALL BEAR AT TOP OF FOOTING ELEVATION U.N.O.
3. ALL METAL BUILDING COLUMNS SHALL BEAR AT TOP OF PEDISTAL AT ELEVEVATION 1199'-0" - ASSUMED 104'-0" U.N.O.
4. ALL DIMENSIONS ARE TO CENTERLINE OF COLUMN, STRUCTURAL LINE, OR FACE OF CMU U.N.O.

- DEPTH FROM FINISH FLOOR TO TOP OF FTG.
C# - COLUMN NUMBER
P# - PEDESTAL NUMBER
F#? - FOOTING NUMBER
CF#? - CONT. FOOTING NUMBER
RF#? - RETAINING WALL FOOTING NUMBER
? - LETTER INDICATES FOOTING THICKNESS (NO LETTER = 12", A=18",B=24" & C=30")

FOUNDATION LEGEND
1" = 1'-0"

1 FOUNDATION PLAN
1/8" = 1'-0"

1"
ONE INCH AT FULL SIZE IF NOT ONE INCH SCALE ACCORDINGLY

DATE
REVISION

©HAWKINS-WEIR ENGINEERS, INC. 2024

STATE OF ARKANSAS LICENSED PROFESSIONAL ENGINEER No. 14516 JOHN M. RIORDAN 8/30/2024

HAWKINS WEIR ENGINEERS, INC.
CSE CORNERSTONE STRUCTURAL ENGINEERING, INC.

Rogers, Arkansas
ROGERS POLLUTION CONTROL FACILITY (PCF)
SOLIDS HANDLING IMPROVEMENTS, PHASE II

DRYER BUILDING
BUILDING FOUNDATION PLAN

ROGERS WATER UTILITIES

DATE:	AUGUST 2024
SCALE:	As indicated
DESIGNED BY:	JMR
DRAWN BY:	TPL
HWEI NO.:	2020043
FILENAME:	SA-03

SHEET NO.
SA-03

8/26/2024 10:04:17 AM / TPL / BUILDING FOUNDATION PLAN
Autodesk Docs://CSE23068 HW Rogers PCF Phase2 SH Improv/406493-Solids Building-CSE.rvt