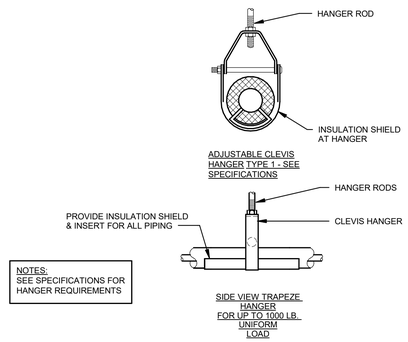


## 1 PIPING HANGER DETAIL
N.T.S.

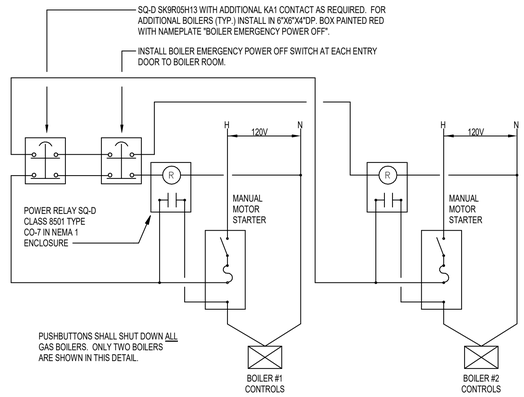


## 2 BOILER SHUT-DOWN DETAIL
N.T.S.

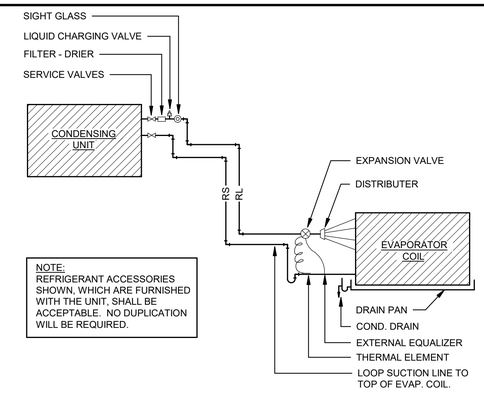


## 3 REFRIGERANT PIPING DIAGRAM
N.T.S.

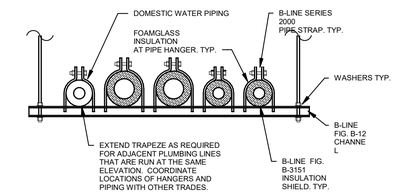


## 4 PIPING SUPPORT DETAIL
N.T.S.

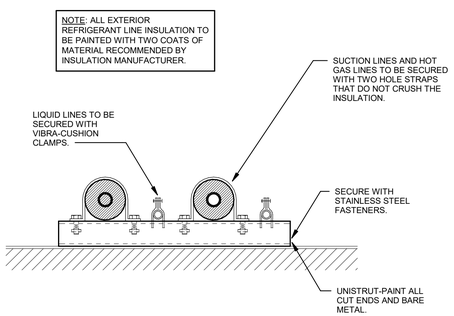


## 5 REFRIGERANT PIPE SUPPORT DETAIL
N.T.S.

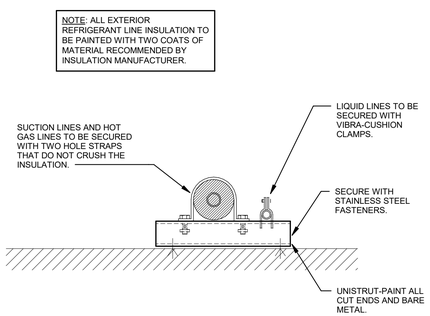


## 6 REFRIGERANT PIPE SUPPORT DETAIL
N.T.S.

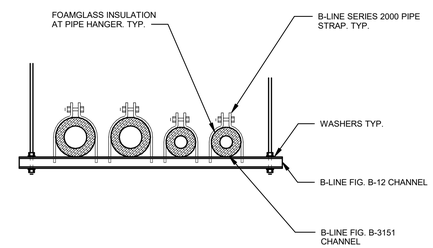


## 7 PIPING SUPPORT DETAIL
N.T.S.

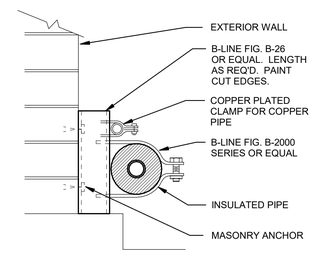


NOTES:
1. INSULATION TO BE UN-SLIT AND MUST BE CONTINUOUS OVER ALL SUCTION PIPING.
2. PAINT INSULATION PER SPECIFICATIONS.

## 8 REFRIGERANT PIPE SUPPORT DETAIL
N.T.S.

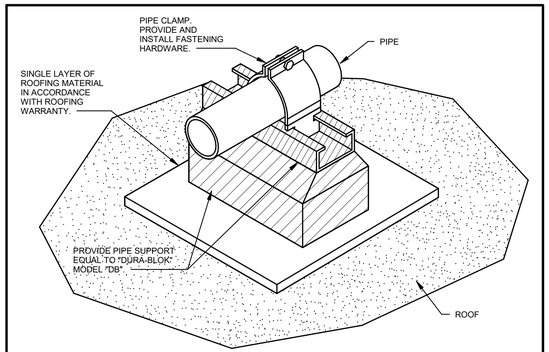


NOTE:
INSTALL SUPPORTS AT A MAXIMUM SPACING OF 8'-0" FOR RIGID PIPING. INSTALL SUPPORTS AT A MAXIMUM SPACING OF 6'-0" FOR P.V.C. PIPING.

## 9 ROOF PIPE SUPPORT DETAIL
N.T.S.

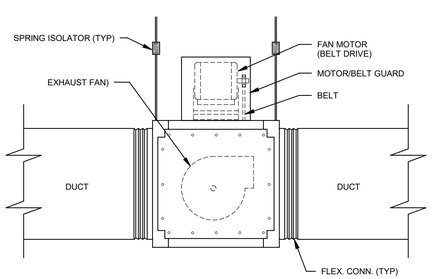


## 10 IN-LINE EXHAUST FAN DETAIL
N.T.S.

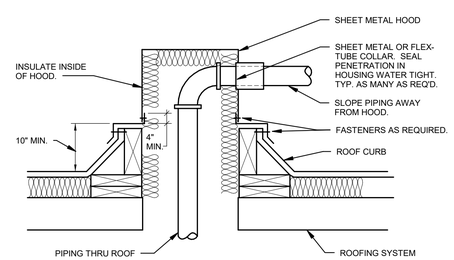


NOTE:
VERIFY WITH ARCHITECTURAL PLANS AND WITH ROOF MANUFACTURER REQUIREMENTS.

## 11 ROOF PENETRATION DETAIL
N.T.S.

# MECHANICAL RENOVATIONS FOR:
# CRAIGHEAD COUNTY COURTHOUSE
## Jonesboro, Arkansas

BRACKETT KRENNERICH architects
100 East Huntington Ave. Suite D P.O. Box 1655
870-932-0571 Fax 870-932-0975
www.bkarchts.com

| Revision Schedule | | | |
|---|---|---|---|
| Tag | Rev. Description | Rev. Date | Issued by |

STATE OF ARKANSAS REGISTERED PROFESSIONAL ENGINEER 9-18-24

CORPORATE REGISTRATION PETTIT & PETTIT CONSULTING ENGINEERS, INC. No. 78 ARKANSAS ENGINEER

© 2024 PETTIT & PETTIT CONSULTING ENGINEERS, INC

Commission Number 2309D

M303

Date: November 11, 2024

HVAC DETAILS

C:\Users\jacks.PETTIT\Documents\#23-077 Craighead Courthouse (R24 Pettit central_jacks.pettitinc.com.rvt
11/13/2024 10:15:35 PM