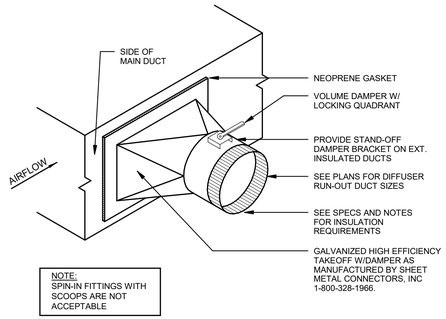

1 BRANCH DUCT TAKE-OFF DETAIL
N.T.S.

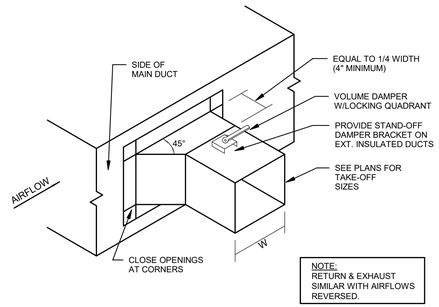

2 BRANCH DUCT TAKE-OFF DETAIL
N.T.S.

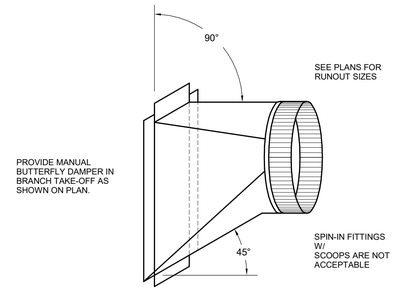

3 BRANCH DUCT TAP FITTING
N.T.S.

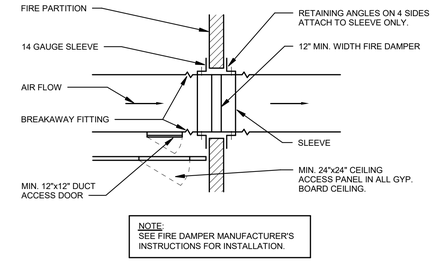

4 FIRE DAMPER DETAIL
N.T.S.

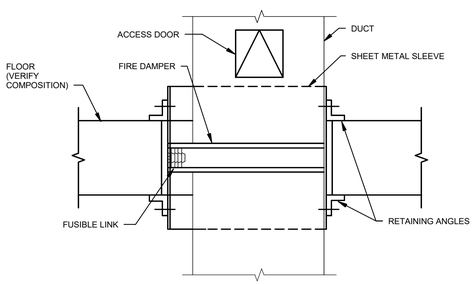

NOTES:
1. ALL DAMPERS MUST HAVE U.L. 555 LABEL
2. PROVIDE MINIMUM 14"X14" ACCESS DOOR IN ALL DUCTS WHEN SIZE PERMITS. FOR SMALLER DUCTS, MAKE PANEL 2" LESS THAN DUCT.
3. DAMPERS SHALL BE TYPE "B" OR "C" WITH 24 GA. MIN. STEEL CHANNEL FRAMES.
4. PROVIDE CEILING OR WALL ACCESS PANELS FOR DAMPERS ABOVE GYP. BOARD CEILINGS OR IN CHASE WALLS.
5. FLOOR INSTALLATION SHOWN, WALL INSTALLATION SIMILAR.

5 FIRE DAMPER INSTALLATION DETAIL
N.T.S.

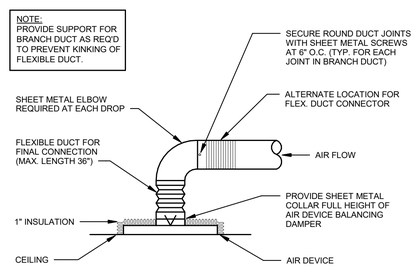

6 DIFFUSER CONNECTION DETAIL
N.T.S.

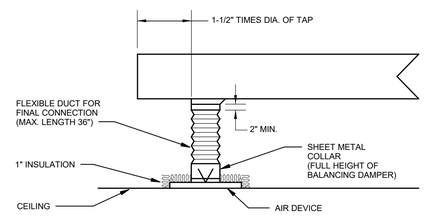

7 DIFFUSER CONNECTION END OF TRUNK DUCT
N.T.S.

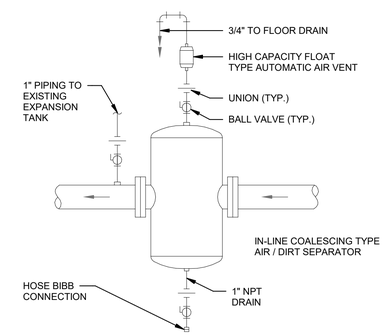

8 AIR SEPARATOR PIPING DETAIL
N.T.S.

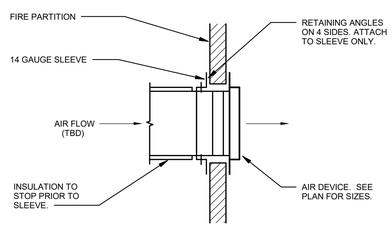

NOTE:
DUCT PENETRATION TO BE INSTALLED IN ACCORDANCE WITH SECTION 712 OF THE 2021 ARKANSAS FIRE PREVENTION CODE.

9 SIDEWALL AIR DEVICE DUCT PENETRATION DETAIL
N.T.S.

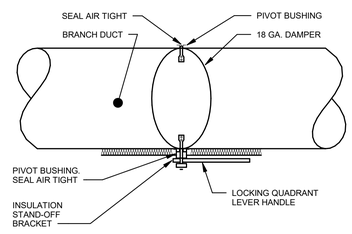

ABOVE ACCESSIBLE CEILINGS

10 MANUAL DAMPER OPERATOR DETAIL
N.T.S.

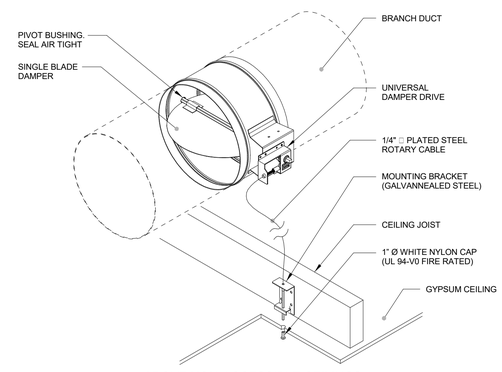

ABOVE NON-ACCESSIBLE CEILINGS

11 MANUAL DAMPER OPERATOR DETAIL
N.T.S.

MECHANICAL RENOVATIONS FOR:
CRAIGHEAD COUNTY COURTHOUSE
Jonesboro, Arkansas

BRACKETT KRENNERICH architects
100 East Huntington Ave. Suite D P.O. Box 1655 870-932-0571 Fax 870-932-0975 www.bkarchts.com

Revision Schedule			
Tag	Rev. Description	Rev. Date	Issued by

STATE OF ARKANSAS REGISTERED PROFESSIONAL ENGINEER JAMES A. JENKINS 11/11/24

CORPORATE REGISTRATION PETTIT & PETTIT CONSULTING ENGINEERS, INC. No. 78 ARKANSAS ENGINEER

© 2024 PETTIT & PETTIT CONSULTING ENGINEERS, INC.

Commission Number 2309D

M301

Date: November 11, 2024

HVAC DETAILS

C:\Users\jacks.PETTIT\Documents\#23-077 Craighead Courthouse (R24 Pettit central_jacks.pettitinc.com.rvt
11/13/2024 10:15:28 PM