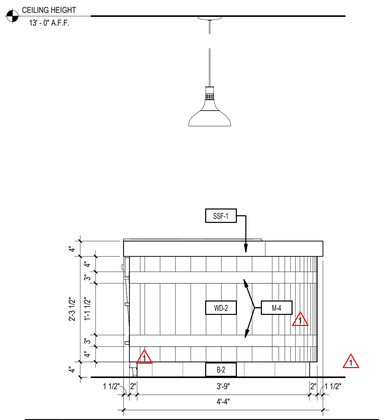

11 TEXAS ROUND UP - ELEVATION 3/4" = 1'-0"

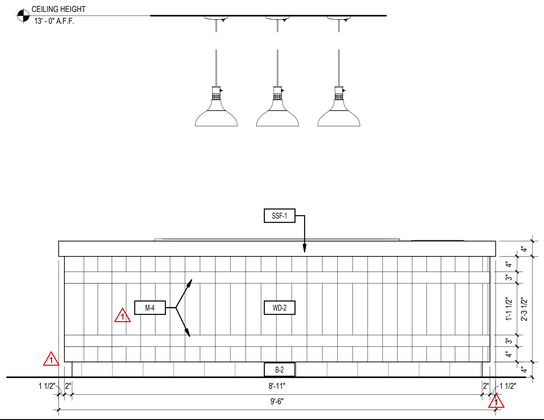

10 TEXAS ROUND UP - ELEVATION 3/4" = 1'-0"

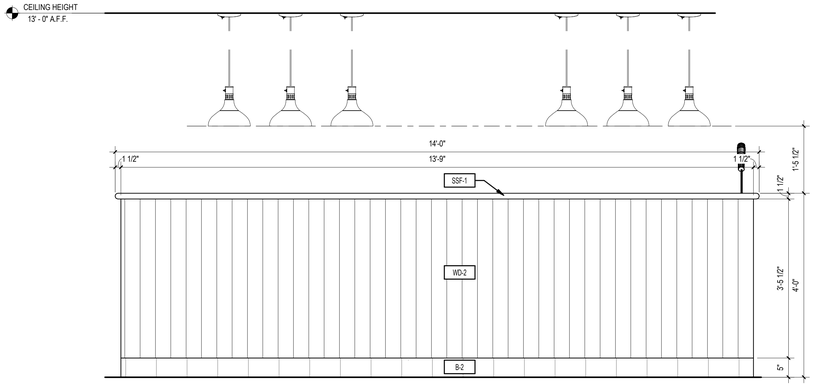

7 TEXAS ROUND UP - ELEVATION 3/4" = 1'-0"

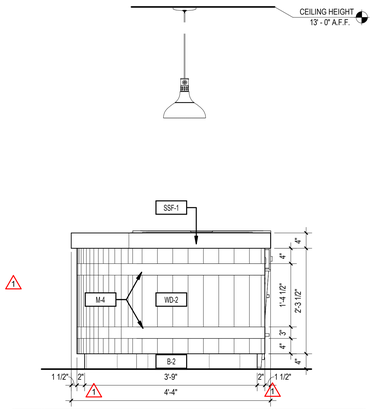

9 TEXAS ROUND UP - ELEVATION 3/4" = 1'-0"

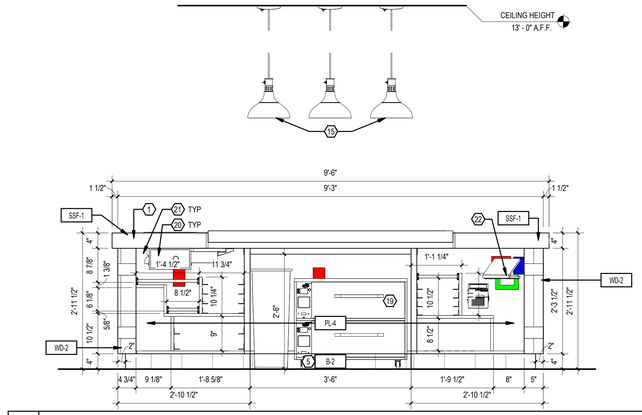

8 TEXAS ROUND UP - ELEVATION 3/4" = 1'-0"

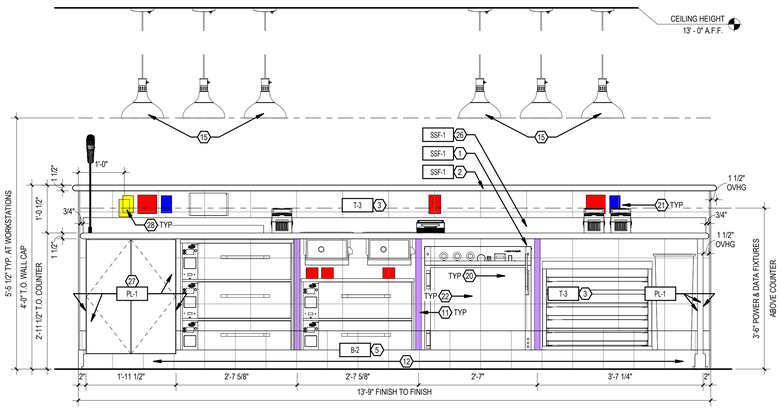

6 TEXAS ROUND UP - ELEVATION 3/4" = 1'-0"

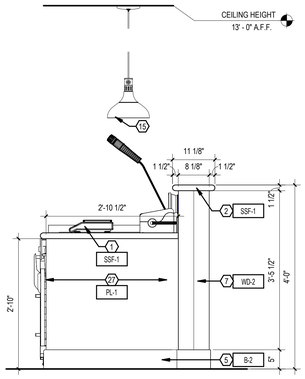

5 TEXAS ROUND UP - ELEVATION 3/4" = 1'-0"

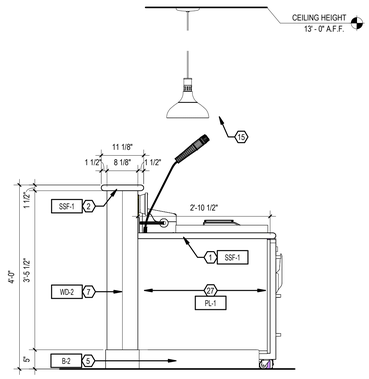

4 TEXAS ROUND UP - ELEVATION 3/4" = 1'-0"

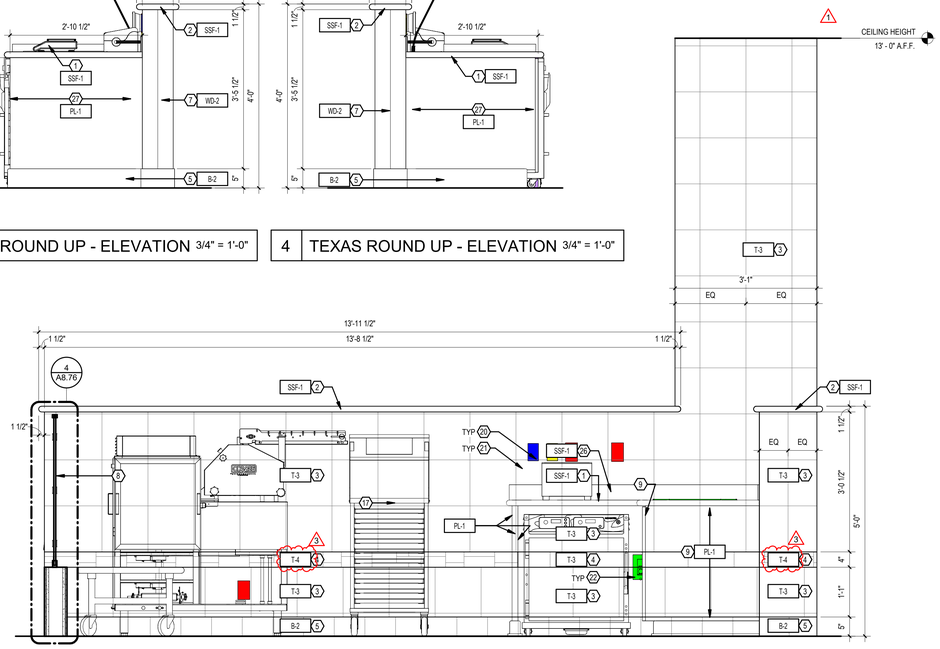

1 TEXAS ROUND UP - ELEVATION 3/4" = 1'-0"

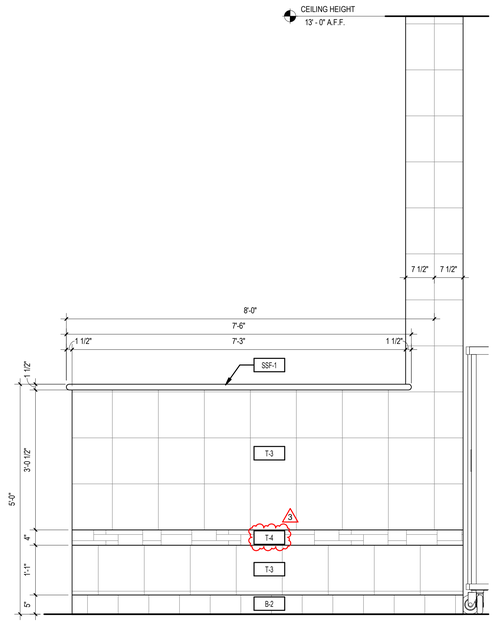

3 TEXAS ROUND UP - ELEVATION 3/4" = 1'-0"

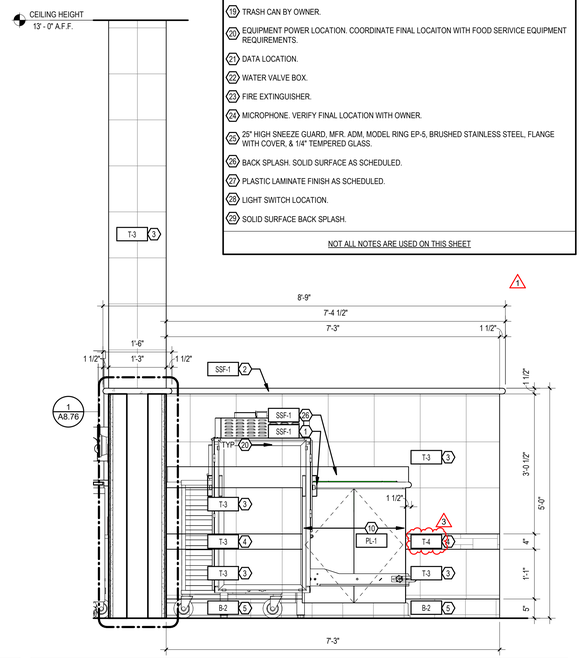

2 TEXAS ROUND UP - ELEVATION 3/4" = 1'-0"

T.R.U./SWEET ST. GENERAL NOTES

1. THE CONTRACTOR & SUB-CONTRACTORS SHALL VERYFY ALL EXISTING CONDITIONS PRIOR TO PERFORMING ANY WORK & SHALL NOTIFY THE ARCHITECT IMMEDIATELY OF ANY CONDITIONS THAT MAY EXIST, THAT ARE NOTE COVERED UNDER THESE PLANS.
2. THE CONTRACTOR AND ALL SUB-CONTRACTORS SHALL NOT DAMAGE ANY INSTRUMENTS OR EQUIPMENT DURING THE COURSE OF THE PROJECT.
3. THE CONTRACTOR AND ALL SUB-CONTRACTORS SHALL RETURN ANY INSTRUMENTS OR EQUIPMENT THAT ARRIVES DAMAGED.
4. METAL STUD FRAMING SHALL BE 18 GA. @ 16" O.C. UNLESS OTHERWISE NOTED. RE: STRUCRURAL FOR DETAILS.
5. WALL, MILLWORK, & EQUIPMENT ELEVATIONS ARE MEASURED FROM FINISHED FLOOR, UNLESS OTHERWISE NOTED.
6. DIMENSIONS ARE TO FINISH FACE OF MATERIAL, UNLESSS OTHERWISE NOTED.
7. PROVIDE DOUBLE STUDS, BLOCKING, BRACING & STEEL BACK-UP PLATES REQUIRED TO SUPPORT EQUIPMENT, MISCELLANEOUS ITEMS, E.G. CASEWORK, CABINETS, FIXTURES, SIGNS WALL MOUNTED EQUIPMENT, ETC. TYPICAL.
8. ALL SYMBOLS, ABBRIVIATIONS, & NOTES MARKED "TYPICAL," OR "TYP," SHALL APPLY IN ALL SIMILAR CIRCUMSTANCES.
9. REFERENCE MECHANCIAL, ELECTRICAL, PLUMING, TECHNOLOGY, & REFRIGERATION DRAWINGS FOR MECHANICAL, POWER, LIGHTING, DATA, PLUMING, & REFRIGERATION REQUIREMENTS.
10. REFERENCE FOOD SERVICE DRAWINGS FOR SCHEDULED EQUIPMENT.
11. DO NOT SCALE DRAWINGS.

T.R.U./SWEET ST. COLOR LEGEND

- PLUMBING FIXTURES & LOCATIONS
- ELECTRICAL FIXTURES & LOCATIONS
- DATA FIXTURES & LOCATIONS
- LIGHTING FIXTUES & LOCATIONS
- REFRIGERATION FIXTURES & LOCATIONS
- SPECIAL MILLWORK ITEMS
- EQUIPMENT BUMPERS

T.R.U./SWEET ST. MILLWORK NOTES

GENERAL:
1. MILLWORK WALLS TO BE INSTALLED PRIOR TO TILE ON FLOOR. MILLWORK CABINETS TO BE INSTALLED AFTER TILE ON FLOOR & WALLS. 3
2. SUPPLY ACCESS PANELS AS REQUIRED. FIELD VERIFY EXACT LOCATIONS.
3. WHERE APPLICABLE CABINETS WILL BE LINE BORED FOR ADJUSTABLE SHELVING.
4. ALL MILLWORK IN TEXAS ROUND UP & FUDGE AREAS SHALL BE CONSTRUCTED USING 19MM (3/4") "KOMATEX" INTEGRAL FOAM SHEETS UNLESS NOTED OTHERWISE.
5. PROVIDE 3/4" THK. VERTICAL SUPPORTS IN BASE CABINETS CONT. FROM FRONT TO BACK @ 48" O.C. MAX.
6. PLUMBING WALL CONNECTIONS TO BE INSTALLED BELOW ELECTRICAL/DATA WALL CONNECTIONS. 3

HARDWARE:
1. **HINGES:** BLUM, CLIP TOP BLUMOTION SOFT CLOSE, STEEL W/ POLISHED FINISH.
2. **PULLS:** HAFELE, ALUMINUM HANDLE, DARK OIL-RUBBED BRONZE ITEM # 124.02.332
3. **CATCHES:** EPCO MAGNETIC
4. **LED LIGHTS:** HAFELE, "LOOX" 12V STRIP.
5. 1/4" PLEXI-GLASS INSERT 6"W x 6"H x 30"L WITH ADJUSTABLE PARTITIONS.

COLORS:
1. ALL SOLID SURFACE TO BE SSF-1, UNLESS OTHERWISE NOTED.
2. ALL LAMINATE AT EXTERIOR EXPOSED SURFACE AREAS TO BE PL-1, UNLESS OTHERWISE NOTED.
3. INTERIOR CABINETS EXPOSED SURFACES TO BE PL-3, UNLESS OTHERWISE NOTED.

NOTE: FIELD VERIFY THE ABOVE FINISHES, CONFIRM WITH OWNER.

T.R.U. ELEVATION - KEYED NOTES

1. COUNTER. SOLID SURFACE AS SCHEDULED.
2. WALL CAP. SOLID SURFACE AS SCHEUDLED.
3. WALL TILE AS SCHEDULED.
4. DECORATIVE TILE BAND AS SCHEDULED.
5. BASE AS SCHEDULED.
6. TILE MEDALLION. RE: 6 / A8.75
7. PONY WALL ASSEMBLY. RE: T.R.U. DETAIL SHEETS FOR WALL HEIGHT, THICKNESS, & FINISHES.
8. GLASS WALL ASSEMBLY. RE: T.R.U. DETAILS SHEETS.
9. MILLWORK. RE: T.R.U. DETAIL SHEETS FOR PLAN DIMENSIONS.
10. MILLWORK DOORS & SCHEDULED HARDWARE.
11. MILLWORK SUPPORT LEG. RE: 14 / A8.76 3
12. EQUIPMENT BUMPER. RE: 8 / A8.76 3
13. SOAP DISPENSER.
14. PAPER TOWEL DISPENSER.
15. PENDANT LAMP, MOUNT 2'-0" ABOVE COUNTER AT FOOD DISPLAY EQUIPMENT, & 2'-6" ABOVE COUNTER AT WORK STATIONS. COORDINATE FINAL MOUNTING HEIGHT WITH OWNER.
16. NOT USED.
17. STAINLESS STEEL EQUIPMENT TABLE.
18. NOT USED.
19. TRASH CAN BY OWNER.
20. EQUIPMENT POWER LOCATION. COORDINATE FINAL LOCAITON WITH FOOD SERIVICE EQUIPMENT REQUIREMENTS.
21. DATA LOCATION.
22. WATER VALVE BOX.
23. FIRE EXTINGUISHER.
24. MICROPHONE. VERIFY FINAL LOCATION WITH OWNER.
25. 25" HIGH SNEEZE GUARD. MFR. ADM. MODEL RING EP-5, BRUSHED STAINLESS STEEL, FLANGE WITH COVER, & 1/4" TEMPERED GLASS.
26. BACK SPLASH. SOLID SURFACE AS SCHEDULED.
27. PLASTIC LAMINATE FINISH AS SCHEDULED.
28. LIGHT SWITCH LOCATION.
29. SOLID SURFACE BACK SPLASH.

NOT ALL NOTES ARE USED ON THIS SHEET

BUC-EE'S

A DEVELOPMENT OF

Buc-ee's Benton, LLC
Saline County, Arkansas

TEL: (979) 230-2920

BUC-EE'S TRAVEL CENTER
BENTON, ARKANSAS
74K - L - 2025 - Q1
INTERSTATE 30 & STATE HIGHWAY 229
BENTON, ARKANSAS 72019

LAWRENCE S. LEVINSON, A.I.A.

7800 Washington Ave., Suite 600
main: 713.600.3600

Houston, TX 77007
www.laarc.com

ISSUE/REVISION LOG:

No.	DESCRIPTION	DATE
1	OWNER CHANGES	09/09/2024
3	OWNER CHANGES	04/23/2025

REGISTERED ARCHITECT
LAWRENCE S. LEVINSON
LICENSE # 2776
STATE OF ARKANSAS

04/23/2025

ISSUED FOR REVIEW:	04/26/2024
ISSUED FOR BID:	05/14/2024
ISSUED FOR PERMIT:	05/14/2024

Copyright 2024 Lawrence S. Levinson, AIA., Warning: This document is protected by U.S. Copyright Law Under Section 102 of the U.S. Copyright and the Architectural Works Copyright Protection Act of 1990. Unauthorized reproduction and distribution of this document or any portion of it, other than for use of this particular project, is prohibited and may result in severe civil and criminal penalties, and will prosecuted to maximum extent possible under the law.

A8.74

TEXAS ROUND UP - ELEVATIONS

LAARC PROJECT NUMBER: 2025-000.000

BENTON, ARKANSAS

Autodesk Docs://74-Buc-ee's Benton-AR (L) 2023/06_BENTON AR_TRU-FUDGE_(L)_.rvt