Quality People. Building Solutions.

Comfort Systems USA (Arkansas), Inc.
P.O. Box 16620
LittleRock, AR 72231
Phone 501-834-3320
Fax 501-834-5416

Date: 6/29/2026
Return Request: 7/6/2026
Project: Hot Springs National Park – Rehabilitate Bathhouses – Buckstaff Bathhouse
Supplier: Harrison Energy Partners
Manufacturer: Lennox
Submittal: Furnace (FUR-1) (Re-Submittal #1)
Submittal Number: 235400.001
Spec Section: 235400
Drawing # and Installation Location: M2-4

ARCHITECT
Kenneth Hahn Architects, Inc.
1343 S. 75th Street
Omaha, Nebraska 68124
(402)391-2111

GENERAL CONTRACTOR
Tepa, LLC
2345 Grand Blvd, Suite 700
Kansas City, Missouri 64108
(816)708-1110

ENGINEER
Alvine Engineering
1201 Cass Street
Omaha, Nebraska 68102
(402)346-7007

MECHANICAL SUBCONTRACTOR
Comfort Systems USA (Arkansas), Inc.
9924 Landers Road
North Little Rock, Arkansas 72117
(501)834-3320

Comments:

CSUSA PROJECT NO.
25-7065
joe@comfortar.com

Harrison Energy Partners

COMMERCIAL HVAC
DONE RIGHT.

SUBMITTAL – Revision 1

Prepared For:
Alvine Engineering

Date:
June 10, 2026

Sold To:
Comfort Systems USA

Job Name:
Buckstaff Bathhouse

Harrison Energy Partners is pleased to provide the enclosed submittal for your review and approval.

Qty.	Product Summary
1	Lennox Gas Fired Furnace Split System

Josh Robinson
Harrison Energy Partners
1501 Westpark Drive
Little Rock, AR 72204
Phone: (501) 661-0621
Cell: (501) 539-0633

The attached information describes the equipment we propose to furnish for this project and is submitted for your approval.

Revision 1 Notes:

1. Ambient air temperature changed from 95 to 105 degrees.
2. Supply airflow changed from 2,055 to 1,995 CFM.

Project Submittal

Project Name: Rehabilitate Bathhouses - Hot Springs National Park
Project Number: 800805
Project Altitude: 500
Project Location:
, US

Date: 6/10/2026
Quote: 551606
Roof Top Units: 0
Split Systems: 1

Customer: Harrison Energy Partners
Engineer: Design Build None

Table of Contents

Tag	Qty	Model	Description
ACCU/FUR-1	1	25U57	EL22KCV-060-230 COND/5.0 TON/230V
	1	25U85	CK40CT-60C COIL 5.0 TON R454B
	1	26S65	ML296UH110XV60CK Gas Furn/110K/5Ton

Revit® Building Information Modeling (BIM) - Click here

AutoCAD® Templates - Click here

Project Submittal

Tag: ACCU/FUR-1
Condenser: EL22KCV-060-230
Evaporator Coil: CK40CT-60C (R454B)
Furnace: ML296UH110XV60CK (RDS)

UNIT OVERVIEW

AHRI Reference - 217886652

Voltage	AHRI SEER2 EER2	Tons	Gross Cooling Ttl/Sens (MBH)	Net Cooling Ttl/Sens (MBH)	Supply Air Flow (cfm)	ESP/TSP (in.WC)	EAT DB/WB (°F)	LAT DB/WB (°F)
208 Volt 1 Phase / 60Hz	17.75 11.7	5.0	58.4 / 54.5	56.0 / 52.1	1,995	0.6 / 0.9	80.0 / 67.0	53.6 / 53.6

COOLING

Cooling Performance		Temperatures (DB/WB °F)		
Gross Cooling (Ttl/Sens)	58.4 / 54.5 MBH	Ambient	105.0	
Net Cooling (Ttl/Sens)	56.0 / 52.1 MBH	Entering	80.0	67.0
Coil Moisture Removal	3.72 lb/hr	Total Leaving – (Coil)	53.6	53.6
		Total Leaving – (Unit)	54.7	54.7

ARI Performance		Compressors		Refrigerant		Condensate Drain	
AHRI Cooling	57.0 MBH	Cooling Stages	Variable	Type	R-454B	Qty	2
		Compressor Qty	1	Cond Suction Line	1 1/8	Size	0.75 in.
				Cond Liquid Line	3/8	Pipe Thread	fpt
				Coil Suction Line	7/8		
				Coil Liquid Line	3/8		

HEATING

Heating Performance		Temperatures (DB/WB °F)		Specifications	
Output (High/Low)	106.0 / 70.0 MBH	Gas Heat Rise	47.8°F	Thermal Efficiency	96.0%
Input (High/Low)	110.0 / 72.0 MBH	Total Leaving	47.8	Gas Line Size	0.5 in.
				Heat Exchange Type	Aluminum

VENTILATION

Air Flow (cfm)		Supply Fan		Air Resistance (in.WC)	
Supply	1,995	Nominal Power	1hp	Total	0.94
		Drive Type	ECM Variable Speed Constant Volume	Ext Supply	0.60
		Speed	Tap A Jumper (+)	Wet Coil	0.34
		Orientation	Upflow/Horizontal		

ELECTRICAL

Condenser		Furnace	
Voltage	208 Volt 1 Phase / 60Hz	Voltage	120V / 1Ph / 60Hz
MCA	30 amp	MCA	
MOCP	50 amp	MOCP	20.0 amp
Condenser Oper Range-Nom Volt	+/- 10%		
Oper Range-Nom Volt	+/- 10%		

ADDITIONAL DATA

Condenser		Furnace		Evaporator Coil	
Dimensions	39.75 in. x 35.75 in. x 39.38 in.	Dimensions	28.75 in. x 21.00 in. x 33.00 in.	Dimensions	22.00 in. x 21.00 in. x 32.25 in.
Total Weight	283 lb	Total Weight	174 lb	Total Weight	73 lb

Field Installed Accessories

Catalog Number	Qty	Description
15Z69	1	iComfort M30 Smart Thermostat Field Installed
69M29	1	2" Concentric Roof Vent Kit US Field Installed

Product Features

Cabinet
Heavy gauge galvanized steel cabinet
Non-corrosive drain pan
Fully Insulated heavy gauge steel cabinet
Heavy Gauge Cold Rolled Steel Cabinet
Quantum™ Coil Enhanced aluminum alloy tube/enhanced fin coil

Cooling System
Hi-Capacity Drier factory installed in liquid line
Low Pressure Switch
Crankcase Heater
Twin Coils assembled in an "A" configuration
Check and Expansion Valve is factory installed

Heating System
Aluminized Steel Inshot Burners
Aluminized Steel Tubular Heat Exchanger
SureLight(R) Hot Surface Ignition
Furnace Liminted Warranty 10 Years Comm

Approvals and Compliance
Only refrigerants in compliance with New York State regulations can be used in the state of New York

Warranty
Condenser Limited warranty on all other covered components of 5 years Condenser See Limited Warranty Certificate included with unit for detailsCondenser Limited compressor warranty of 10 years for Residential InstallationsCondenser Limited compressor warranty of 5 years for Non-Residential InstallationsCondenser Limited warranty on all covered components of 1 year in Non-Residential InstallationsCoil See Limited Warranty Certificate included with unit for detailsCoil Limited warranty on all other covered components of 1 year (Comm Use)Furnace See Limited Warranty Certificate included with unit for detailsFurnace Limited warranty on heat exchanger of 20 yearsFurnace Limited warranty on all other covered components of 1 year (Comm Use)Furnace Limited warranty on Surelight ignition control system of 1 Year (Comm Use)

DIMENSIONS - UNIT

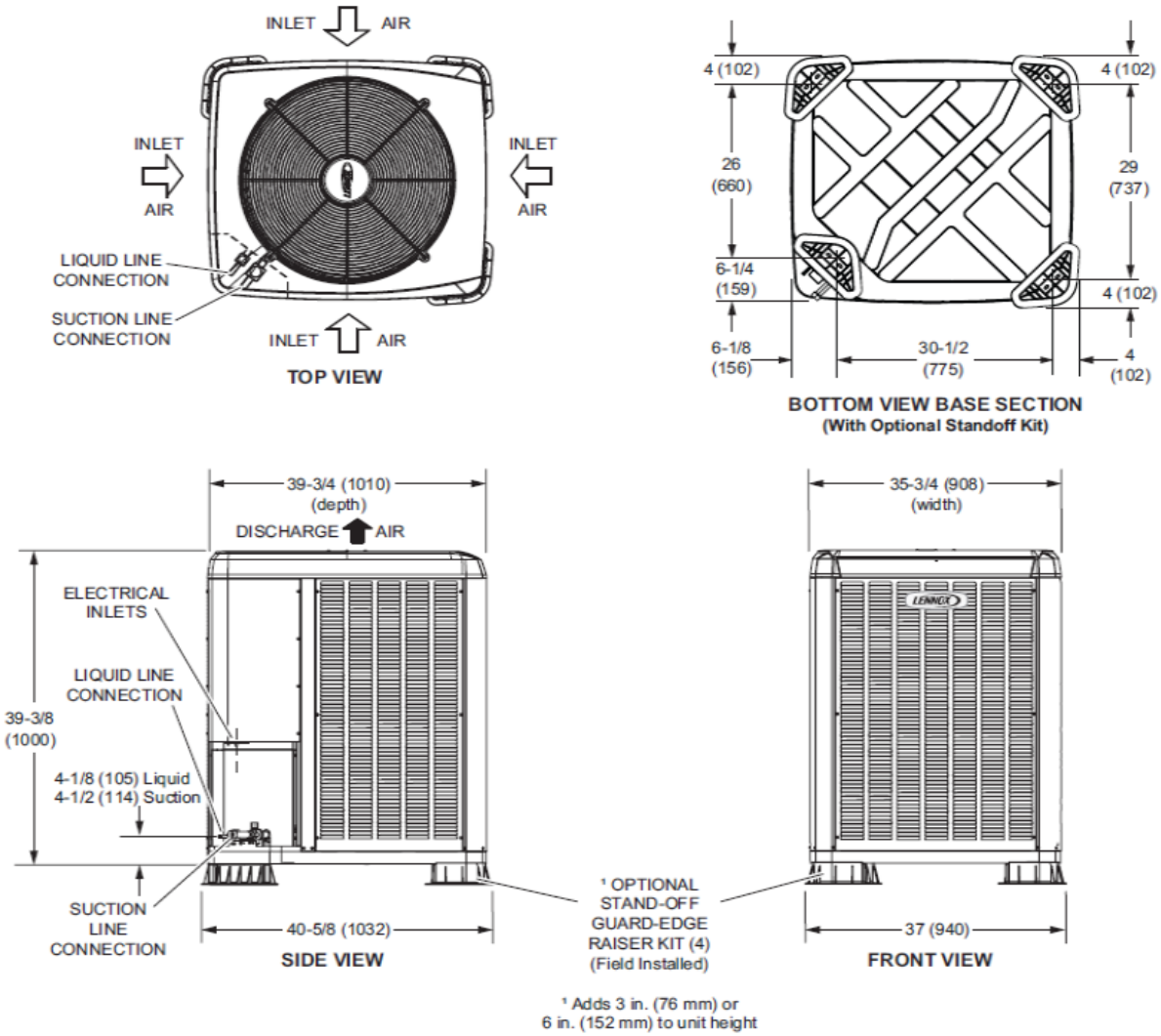

[1] Adds 3 in. (76 mm) or 6 in. (152 mm) to unit height

CK40CT-49C-6F and CK40-CT-60C-6F

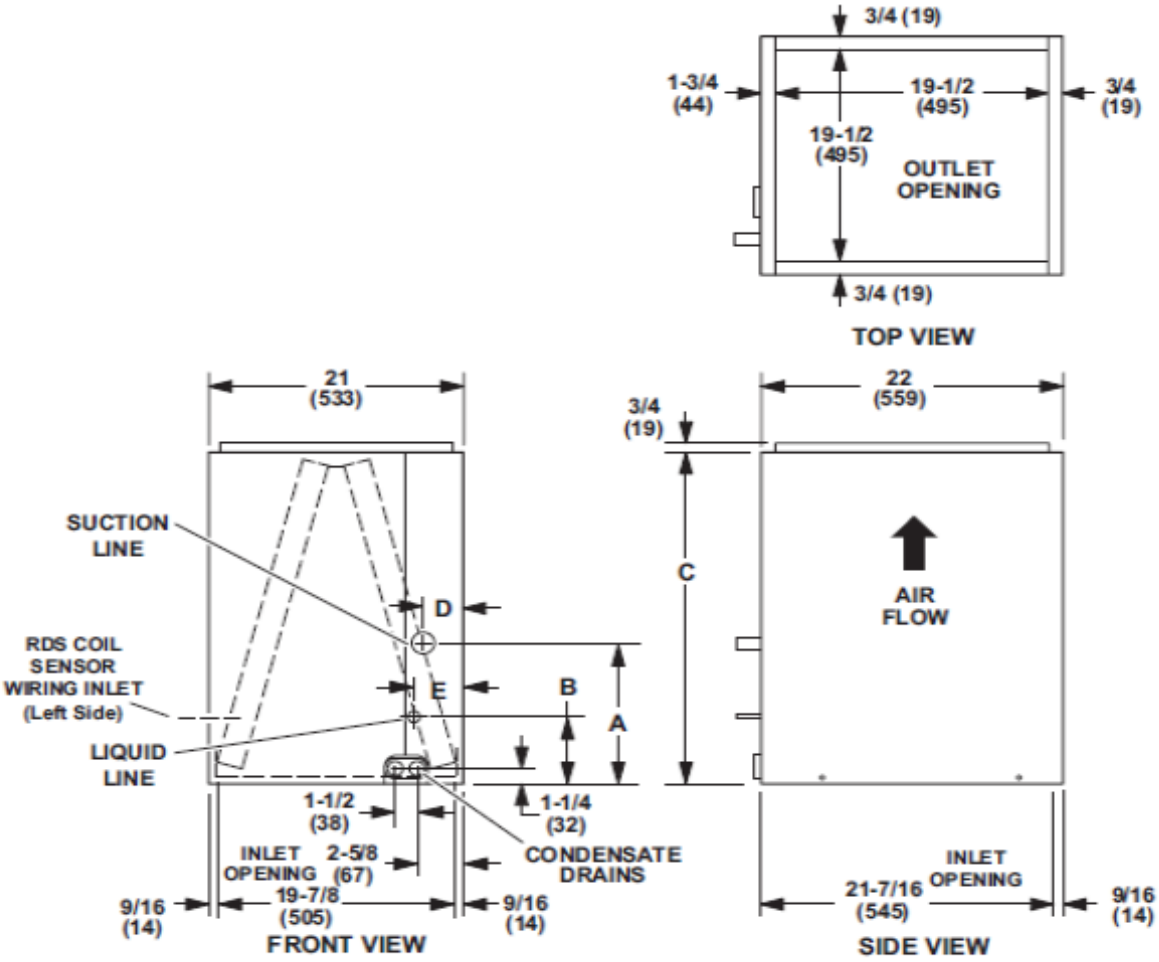

Size	A		B		C		D		E	
	in.	mm	in.	mm	in.	mm	in.	mm	in.	mm
49C	10	254	3-5/8	92	29-1/2	749	2-3/8	60	2-5/8	66
60C	14-1/2	368	3-5/8	92	31-1/2	800	2-3/8	60	2-5/8	66

DIMENSIONS - FURNACE/COIL COMBINED DIMENSIONS

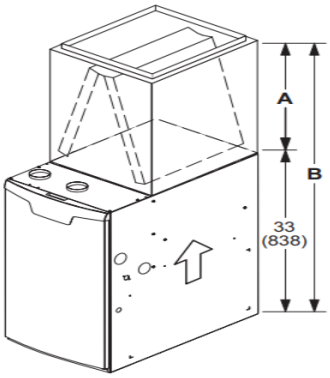

UPFLOW POSITION - CASED

Model		A		B	
CK40CT	C35/CX35	in.	mm	in.	mm
CK40CT-18/24A CK40CT-18/24B	C35/CX35-18/24A C35/CX35-18/24B	16-1/2	419	49-1/2	1257
CK40CT-24A CK40CT-24B	C35/CX35-24A C35/CX35-24B	18-1/2	470	51-1/2	1308
CK40CT-30A CK40CT-30B	C35/CX35-30A C35/CX35-30B	22-1/2	572	55-1/2	1410
CK40CT-30/36A CK40CT-30/36B CK40CT-30/36C	C35/CX35-30/36A C35/CX35-30/36B C35/CX35-30/36C	24-1/2	622	57-1/2	1461
CK40CT-36A CK40CT-36B	C35/CX35-36A C35/CX35-36B	24-1/2	622	57-1/2	1461
CK40CT-48B CK40CT-48C	C35/CX35-48B C35/CX35-48C	27-1/2	699	60-1/2	1537
CK40CT-49C	C35/CX35-49C	29-1/2	749	62-1/2	1588
CK40CT-50/60C	C35/CX35-50/60C	27-1/2	699	60-1/2	1537
CK40CT-60C	CX35-60C	31-1/2	800	64-1/2	1638

UPFLOW POSITION - UNCASED

Model		A		B	
CK40UT	C35	in.	mm	in.	mm
CK40UT-18/24A CK40UT-18/24B	C35-18/24A C35-18/24B	14-1/8	359	47-1/8	1197
CK40UT-24A CK40UT-24B	C35-24A C35-24B	16-3/8	416	49-3/8	1254
CK40UT-30A CK40UT-30B	C35-30A C35-30B	20-3/4	527	53-3/4	1365
CK40UT-30/36A CK40UT-30/36B CK40UT-30/36C	C35-30/36A C35-30/36B C35-30/36C	22-1/4	565	55-1/4	1403
CK40UT-36A CK40UT-36B	C35-36A C35-36B	22-3/8	568	55-3/8	1407
CK40UT-48B CK40UT-48C	C35-48B C35-48C	26-1/4	667	59-1/4	1505
CK40UT-49C	C35-49C	28-1/2	724	61-1/2	1562
CK40UT-50/60C	C35-50/60C	25-7/8	657	58-7/8	1495
CK40UT-60C	C35-60C	30-5/8	778	63-5/8	1616

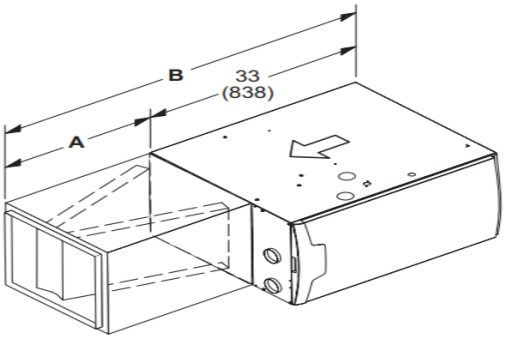

HORIZONTAL POSITION

Model		A		B	
CK40HT	CHX35	in.	mm	in.	mm
CK40HT-18A CK40HT-24A CK40HT-24B CK40HT-30B CK40HT-36A CK40HT-36B CK40HT-36C CK40HT-42C CK40HT-48C	CHX35-18A CHX35-24A CHX35-24B CHX35-30B CHX35-36A CHX35-36B CHX35-36C CHX35-42C CHX35-48C	26-1/2	673	59-1/2	1511
CK40CT-30A CK40CT-42B CK40CT-48B CK40CT-51/61C	CHX35-30A CHX35-42B CHX35-48B CHX35-51/61C	31-1/2	880	64-1/2	1638

DIMENSIONS - UNIT - UPFLOW POSITION

[1] NOTE - 60C size units that require air volumes over 1800 cfm must have one of the following:
1. Single side return air and Optional Return Air Base with transition that must accommodate required 20 x 25 x 1 inch (508 x 635 x 25 mm) air filter to maintain proper velocity.
2. Bottom return air.
3. Return air from both sides.
4. Bottom and one side return air.

See Blower Performance Tables for additional information.

[2] Optional Side Return Air Filter Kit is not for use with the Optional Return Air Base.

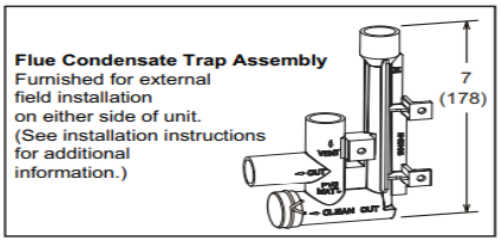

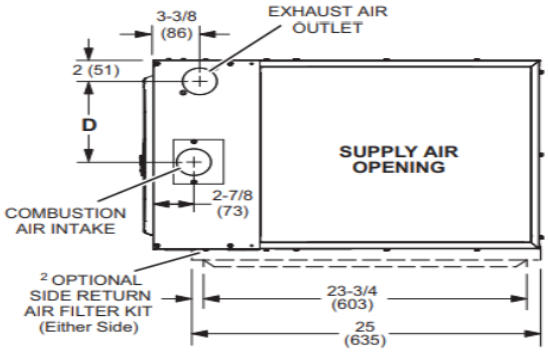

TOP VIEW

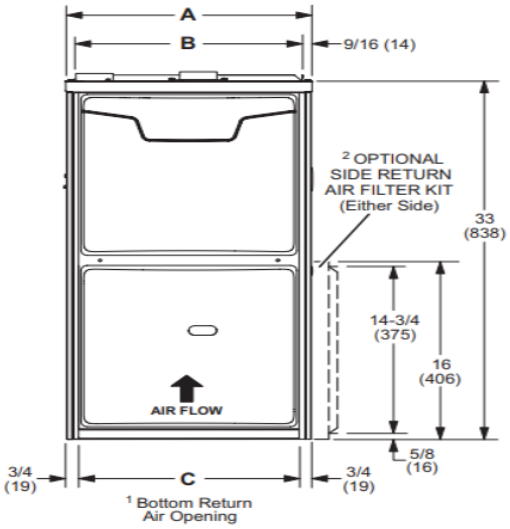

FRONT VIEW

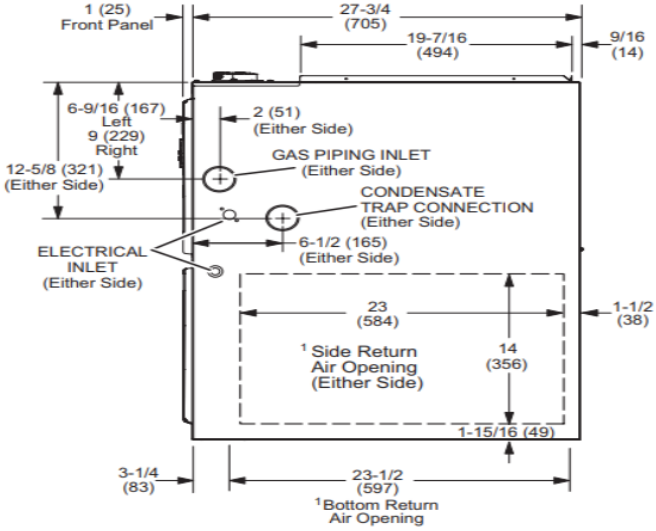

SIDE VIEW

Model No.	A		B		C		D	
	in.	mm	in.	mm	in.	mm	in.	mm
ML296UH045XV36BK ML296UH070XV36BK	17-1/2	446	16-3/8	416	16	406	7-5/8	194
ML296UH090XV48CK ML296UH110XV60CK	21	533	19-7/8	505	19-1/2	495	9-3/8	238