HYDRONIC SYSTEM SEQUENCE OF OPERATION:

GENERAL:

THE CHILLED WATER SYSTEM CONSISTS OF A VARIABLE PRIMARY PUMPING SYSTEM COMPRISED OF ONE PUMP COUPLED WITH AN AIR COOLED CHILLER. THE HEATING WATER SYSTEM IS A VARIABLE PRIMARY PUMPING SYSTEM COMPRISED OF ONE PUMP COUPLED WITH ONE CONDENSING STYLE BOILER.

CHILLED WATER PUMP:

THE CHILLED WATER PUMP'S SPEED SHALL BE MODULATED TO MAINTAIN THE DIFFERENTIAL PRESSURE (ADJUSTABLE) REQUIRED FOR ADEQUATE FLOW DETERMINED BY THE TAB CONTRACTOR.

CHILLED WATER BYPASS:

NO CHILLED WATER BYPASS, MINIMUM CHILLER FLOW MAINTAINED VIA 3-WAY VALVES.

CHILLER:

THE CHILLER SHALL BE EQUIPPED WITH EQUIPMENT CONTROL SUPPLIED BY THE MANUFACTURE TO SEQUENCE THE COMPRESSORS BASED ON THE ACTUAL LOAD. ONCE FLOW VERIFICATION IS ACHIEVED, THE STAND-A-LONE CONTROL SHALL SEQUENCE COMPRESSORS AND FANS TO MAINTAIN A SUPPLY TEMPERATURE OF 44 DEGREES (ADJUSTABLE). THE EMS SHALL INTERLOCK WITH CHILLER CONTROLS FOR START/STOP AND ALARM MONITORING.

HEATING WATER PUMP:

THE HEATING WATER PUMP'S SPEED SHALL BE MODULATED TO MAINTAIN THE DIFFERENTIAL PRESSURE (ADJUSTABLE) REQUIRED FOR ADEQUATE FLOW DETERMINED BY THE TAB CONTRACTOR.

SWING PUMP:

SWING PUMP IS TO ONLY BE UTILIZED DURING SERVICING OF EITHER CHILLED OR HEATING WATER PUMP. THE PUMP IS TO BE MANUALLY STARTED AFTER ASSOCIATED VALVES ARE OPENED (EITHER CHILLED OR HEATING WATER SYSTEM).

BOILER:

THE BOILER SYSTEM SHALL START AND STOP UPON EMS COMMAND. THE BOILER CONTROLLER SHALL STAGE THE BOILER'S RATE OF FIRE AS NEEDED TO MEET THE FACILITY'S LOAD. THE FLOW VERIFICATION SHALL BE SATISFIED PRIOR TO BOILER OPERATION. THE SYSTEM'S FIRE RATE (% FIRE) SHALL BE MODULATED TO MAINTAIN THE LEAVING WATER TEMPERATURE AT SETPOINT. THE LEAVING WATER TEMPERATURE SHALL BE DETERMINED BY THE EMS THROUGH THE GLOBAL TEMPERATURE SENSOR AND SHALL SEND THE SETPOINT TO THE BOILER CONTROL SYSTEM (4ma and 20ma). THE HEATING WATER SUPPLY TEMPERATURE SHALL BE 140 DEG. F (ADJUSTABLE) WHEN THE OUTSIDE AIR TEMPERATURE IS AT OR BELOW 50 DEG. F (ADJUSTABLE). WHEN THE OUTSIDE AIR TEMPERATURE RISES ABOVE 50 DEG. F. (ADJUSTABLE), THE SUPPLY TEMPERATURE SHALL BE RESET DOWN LINEARLY 5 DEG. F (ADJUSTABLE) SUPPLY TEMPERATURE FOR EVERY 1 DEG. F (ADJUSTABLE) CHANGE IN OUTSIDE AIR TEMPERATURE TO 110 DEG. F. (ADJUSTABLE) AT 60 DEG. F (ADJUSTABLE). WHEN THE OUTSIDE AIR TEMPERATURE FALLS BELOW 60 DEG. F (ADJUSTABLE), THE SUPPLY TEMPERATURE SHALL RESET UP LINEARLY AT THE SAME RATE AS IT RESETS DOWN UNTIL IT REACHES 140 DEG. F (ADJUSTABLE) AT AN OUTSIDE AIR TEMPERATURE OF 50 DEG. F (ADJUSTABLE).

CONTROLS LEGEND

AI	ANALOG INPUT	TEC	TERMINAL EQUIPMENT CONTROLLER
AO	ANALOG OUTPUT		TEMPERATURE SENSOR
DI	DIGITAL INPUT		FLOW SWITCH
DO	DIGITAL OUTPUT	M	2-WAY CONTROL VALVE
T	THERMOSTAT	M	3-WAY CONTROL VALVE
TS	TEMPERATURE SENSOR		DAMPER ACTUATOR
	TEMPERATURE SENSOR		SMOKE DETECTOR
	AVERAGING TEMPERATURE SENSOR		DIFFERENTIAL PRESSURE TRANSMITTER
	HUMIDITY SENSOR		PRESSURE SWITCH / SENSOR

WORKSTATION:

THE CONTROLS CONTRACTOR SHALL INSTALL A NEW COMPLETE CONTROLS SYSTEM FOR THIS BUILDING AND SHALL PROVIDE A NEW WORKSTATION AT THE LOCATION OF THE EXISTING CAMPUS ENERGY MANAGEMENT SYSTEM (FIELD VERIFY LOCATION). LIVE GRAPHICS FOR THE NEW WORKSTATION SHALL INCLUDE THE FOLLOWING POINTS PER PIECE OF EQUIPMENT:

AIR HANDLERS, FAN COIL UNITS, CHILLERS, BOILERS, PUMPS, AND POINTS INDICATED ON DIAGRAMS.

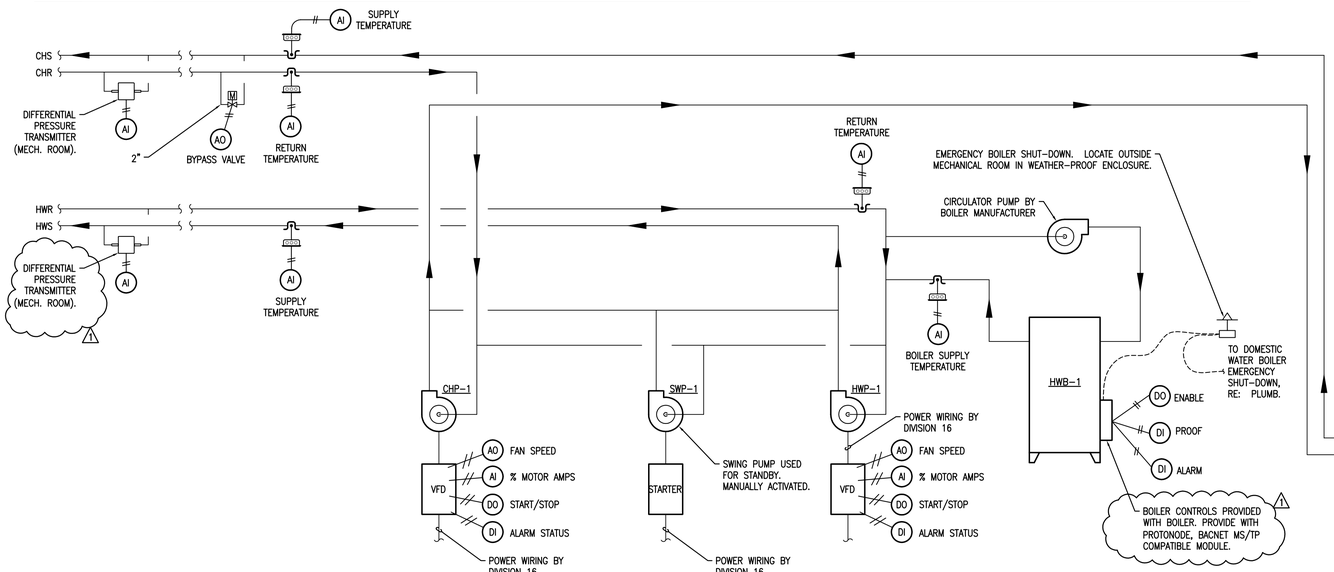

2 CHILLED AND HEATING WATER CONTROL DIAGRAM
SCALE: NONE

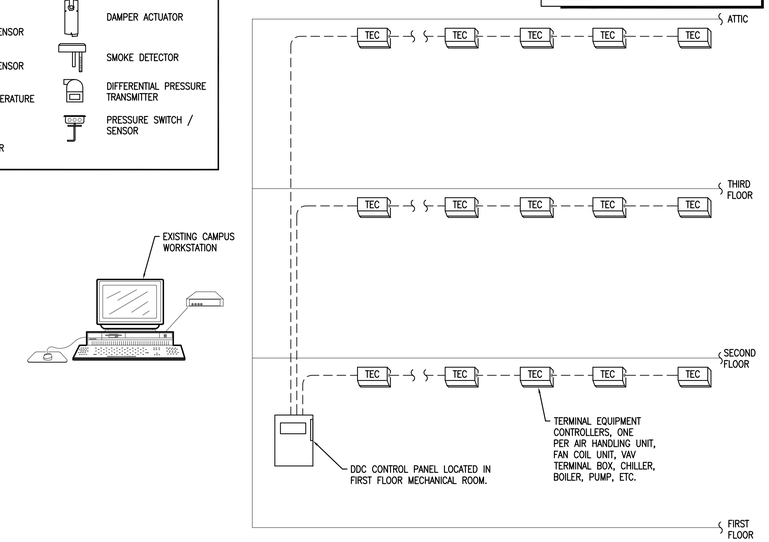

CONTROL RISER DIAGRAM
1 SCALE: NONE

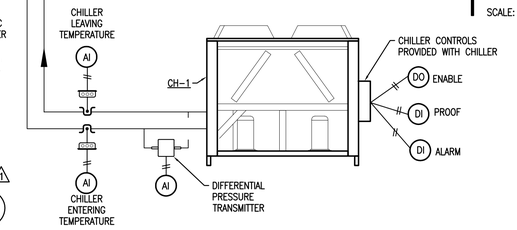

ENERGY RECOVERY AIR HANDLING UNITS (ERAHU-#) SEQUENCE OF OPERATION:

UNITS SHALL BE CONTROLLED VIA FACTORY MOUNTED MICROPROCESSOR CONTROLLER. UNIT SHALL BE CAPABLE OF STAND-A-LONE OPERATION WITH NETWORK COMPATIBILITY SPECIFIED BY CONTROLS CONTRACTOR (TRANE BACNET). UNIT SHALL BE STARTED AND STOPPED UPON SIGNAL OF THE EMS (TYPICALLY TO OPERATE 24/7). WHEN UNIT IS NOT IN OPERATION THE ISOLATION DAMPERS ARE TO BE CLOSED.

WHEN THE OUTDOOR AIR TEMPERATURE IS ABOVE 80 DEGREES F (ADJUSTABLE) THE CONTROLLER SHALL MODULATE THE CHILLED WATER VALVE TO MAINTAIN THE SUPPLY AIR TEMPERATURE AT 55 DEGREES F (ADJUSTABLE). THE REHEAT VALVE SHALL BE LOCKED OUT AND THE ENTHALPY WHEEL SHALL BE IN OPERATION.

WHEN THE OUTSIDE AIR TEMPERATURE FALLS BELOW 55 DEGREES F THE CHILLED WATER VALVE SHALL BE CLOSED AND THE HEATING CONTROL VALVE MODULATED TO MAINTAIN A SUPPLY AIR TEMPERATURE OF 70 DEGREES F (ADJUSTABLE).

WHEN THE OUTSIDE AIR TEMPERATURE FALLS BETWEEN 55 AND 80 DEGREES F THE CHILLED WATER VALVE IS TO BE MODULATED TO MAINTAIN A COIL LEAVING TEMPERATURE OF 55 DEGREES AND THE HEATING WATER VALVE IS TO BE MODULATED TO MAINTAIN A UNIT DISCHARGE TEMPERATURE OF 70 DEGREES F.

FREEZE CONTROL: IF THE ENTERING COIL TEMPERATURE FALLS BELOW 38 DEGREES F. THE SUPPLY FAN IS TO STOP AND ISOLATION DAMPER TO CLOSE (EXHAUST FAN TO REMAIN OPERATIONAL). THE UNIT MUST BE MANUALLY RESET AS CONDITION INDICATES ENTHALPY WHEEL FAILURE.

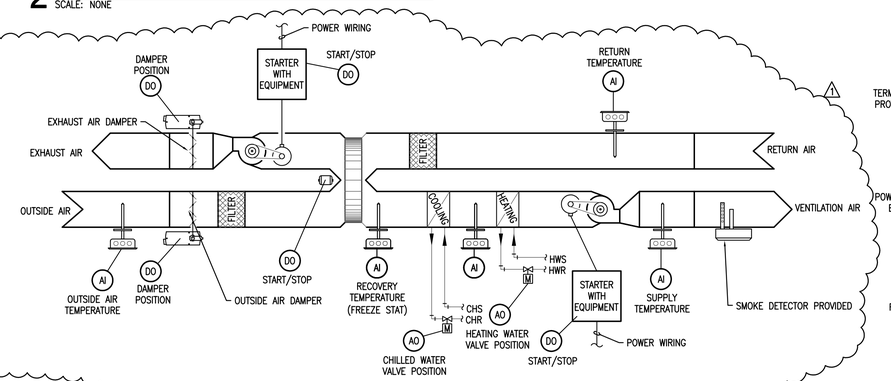

1 ENERGY RECOVERY AIR HANDLING UNIT CONTROL DIAGRAM
SCALE: NONE

FAN COIL UNIT SEQUENCE OF OPERATION:

THE TERMINAL UNIT CONTROLLER SHALL SEQUENCE THE FAN SPEED (OFF, LOW, MEDIUM, AND HIGH) AND MODULATE THE CHILLED WATER AND HEATING WATER VALVES TO MAINTAIN THE SPACE TEMPERATURE. INTERLOCK MOISTURE SENSOR TO SHUT DOWN UNIT AND ALARM UPON WATER DETECTION IN DRAIN PAN.

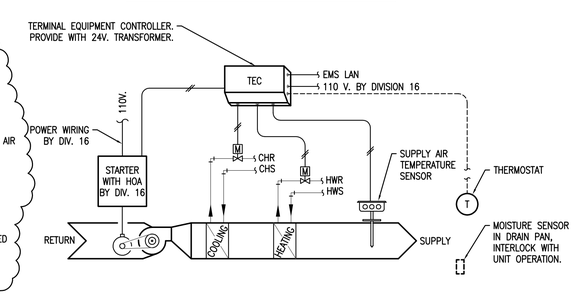

3 FAN COIL UNIT CONTROL DIAGRAM (4-PIPE)
SCALE: NONE

VARIABLE FREQUENCY DRIVES

DESIGNATION	REFERENCE PRODUCT	LOCATION	SERVES	TYPE	RATED HORSEPOWER	EFFICIENCY (%)	ELECTRICAL		REMARKS
							VOLTS	PHASE	
VFD-HWP-1	ABB ACH-550	MECHANICAL RM. BASEMENT	HWP-1	PWM	5	96	208	3	FURNISH WITH INPUT DISCONNECT SWITCH, INPUT LINE REACTORS, AND CONTROL INTERFACE WITH EMS.
VFD-CHP-1	ABB ACH-550	MECHANICAL RM. BASEMENT	CHP-1	PWM	7.5	96	208	3	FURNISH WITH INPUT DISCONNECT SWITCH, INPUT LINE REACTORS, AND CONTROL INTERFACE WITH EMS.

NOTES:
1. VARIABLE FREQUENCY DRIVES SHALL BE PROVIDED BY THE CONTROLS CONTRACTOR.
2. ALL VARIABLE FREQUENCY DRIVES WITHIN THIS PROJECT SHALL BE OF THE SAME SERIES, PROVIDE 2-YEAR PARTS WARRANTY.

CERTIFICATE OF AUTHORIZATION ENERGY ENGINEERING CONSULTANTS, INC. No. 1586 ARKANSAS ENGINEER

EECI ENERGY ENGINEERING CONSULTANTS, INC.
10 CORPORATE HILL DR., STE. 100 PH: (501) 244-0511
LITTLE ROCK, AR 72205 FX: (501) 244-0241

LITTLE ROCK A.F.B. ARKANSAS

HGL Construction

CLEMENTS & ASSOCIATES
ARCHITECTURE, INC.
507 MAIN STREET
NORTH LITTLE ROCK, ARKANSAS 72114
PHONE: 501-375-3380
WWW.CLEMENTSARCHITECTS.COM

STATE OF ARKANSAS REGISTERED PROFESSIONAL ENGINEER NOAH D. KINDER NO. 13207 2-29-24

No.	Revision/Issue	Date	By	Appr'd
1	100 REVISED SUBMITTAL	4/26/24		

PROJECT TITLE: REPAIR (SUS) AIRMEN DORMITORY BLDG 854

SHEET TITLE: MECHANICAL CONTROLS

ISSUED BY: HS, BD	LEAD DESIGNER: GC
DRAWN BY: HS	PROJECT NUMBER: NKAK 21-1034
REVIEWED BY: GC	SHEET: M3.03
DATE: 29 FEB. 2024	
SCALE: AS NOTED	82 OF 100