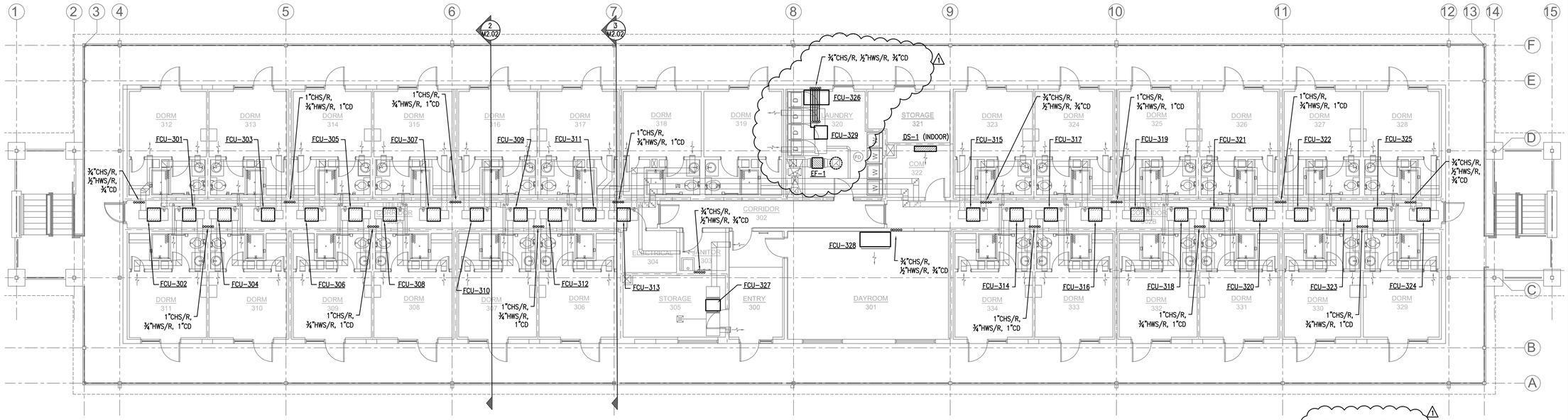

1 MECHANICAL PIPING PLAN - THIRD FLOOR

SCALE: 1/8" = 1'-0"

NOTE: LABELS HAVE BEEN MOVED AN MODIFIED FOR CLARITY. ONLY CLOUDED AREAS HAVE CHANGED.

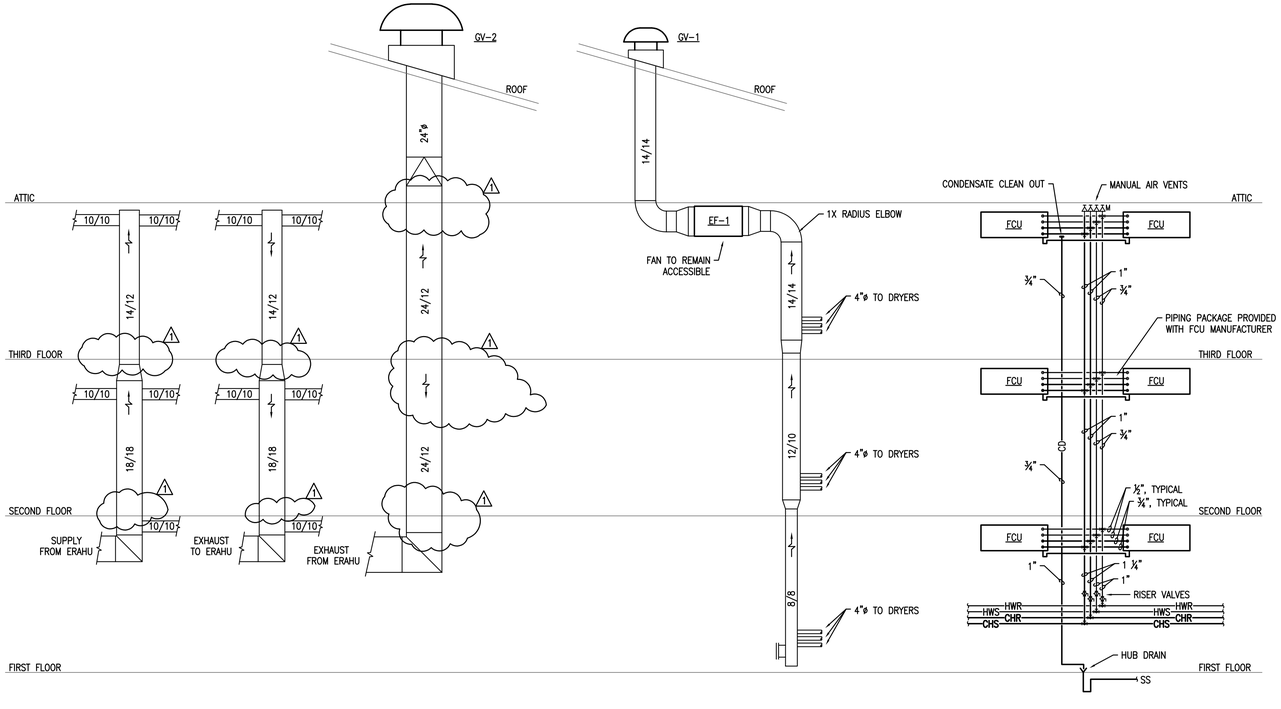

DUCT RISERS | DRYER EXHAUST | HVAC PIPING

3 TYPICAL HVAC RISERS

SCALE: NONE

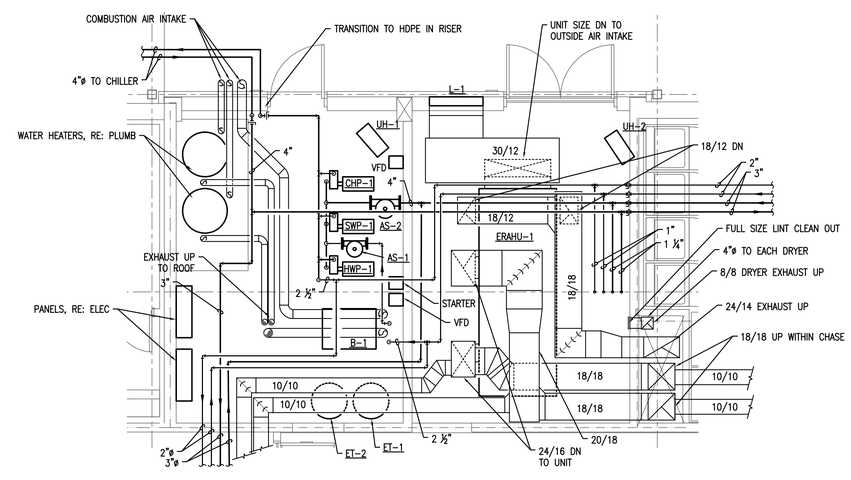

2 MECHANICAL ROOM ENLARGED PLAN

SCALE: 1/4" = 1'-0"

0' 4' 8' 16'

SCALE: 1/8" = 1'-0"

LITTLE ROCK A.F.B.
ARKANSAS

HGL Construction

CLEMENTS & ASSOCIATES
ARCHITECTURE, INC.
507 MAIN STREET
NORTH LITTLE ROCK, ARKANSAS 72114
PHONE: 501-375-3380
WWW.CLEMENTSARCHITECTS.COM

STATE OF ARKANSAS REGISTERED PROFESSIONAL ENGINEER NOAH D. KINDER NO. 13207 2-29-24

No.	Revision/Issue	Date	By	APP'D
1	100 REVISED SUBMITTAL	4/26/24		

PROJECT TITLE: REPAIR (SUS) AIRMEN DORMITORY BLDG 854

SHEET TITLE: MECHANICAL PIPING PLAN

DRAWN BY: HS, BD
LEAD DESIGNER: GC
QUALITY REVIEW: HS
PROJECT NUMBER: NKAK 21-1034
RECORDED BY: GC
SHEET: M2.04
DATE: 29 FEB. 2024
SCALE: AS NOTED
79 OF 100

CERTIFICATE OF AUTHORIZATION ENERGY ENGINEERING CONSULTANTS, INC. No. 1586 ARKANSAS ENGINEER

EECI ENERGY ENGINEERING CONSULTANTS, INC.
10 CORPORATE HILL DR., STE. 100 PH: (501) 244-0511
LITTLE ROCK, AR 72205 FX: (501) 244-0241