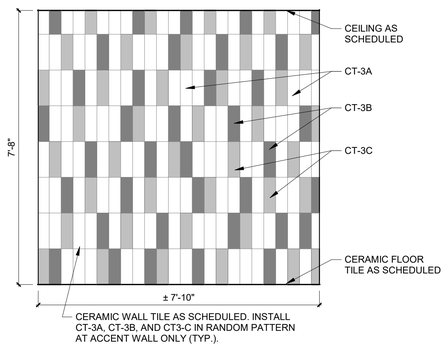

5 ADA RESTROOM 102 ACCENT WALL
1/2" = 1'-0"

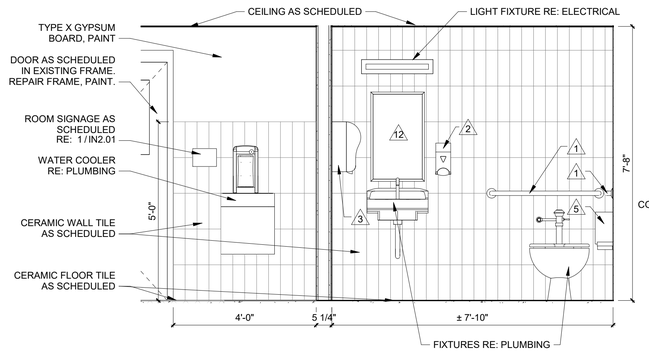

4 ENTRY 100 / ADA RESTROOM 102
1/2" = 1'-0"

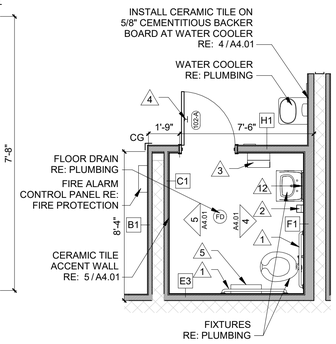

3 ENLARGED PLAN - ADA RESTROOM 102
1/4" = 1'-0"

SYMBOLS LEGEND

MECHANICAL 101	ROOM NAME / ROOM NUMBER
B	WALL TYPE RE: A3.03
202-B	DOOR SYMBOL AND NUMBER RE: DOOR SCHEDULE
##	WINDOW TYPE RE: WINDOW SCHEDULE
1 A1.01	SECTION MARK DETAIL NUMBER SHEET NUMBER
# SLOPE	SLOPE MEASUREMENT AND DIRECTION
FD	FLOOR DRAIN RE: PLUMBING
T	THRESHOLD RE: PROJECT MANUAL
#	TOILET ACCESSORY TAG RE: TOILET ACCESSORY SCHEDULE
1 A1.01	EXTERIOR ELEVATION DETAIL NUMBER SHEET NUMBER
1 A101	INTERIOR ELEVATION DETAIL NUMBER SHEET NUMBER
# ## SIM	ENLARGED DETAIL DETAIL NUMBER SHEET NUMBER
	FLOOR INFILL RE: STRUCTURAL
	EXISTING WALL TO REMAIN
	NEW WALL OR INFILL
DS	DOWNSPOUT
	FIRE RATED PARTITION RE: WALL TYPES & LIFE SAFETY. CONSTRUCT AS 1-HR FR UL DESIGN U419

NOTE: UL DESIGN IS TO ENSURE ALL WALLS MEET THE RATINGS REQUIRED BY LIFE SAFETY CODE. DOOR RATINGS ARE TO MEET LIFE SAFETY FIRE RATINGS NOTED ON LS1.01 & LS1.02

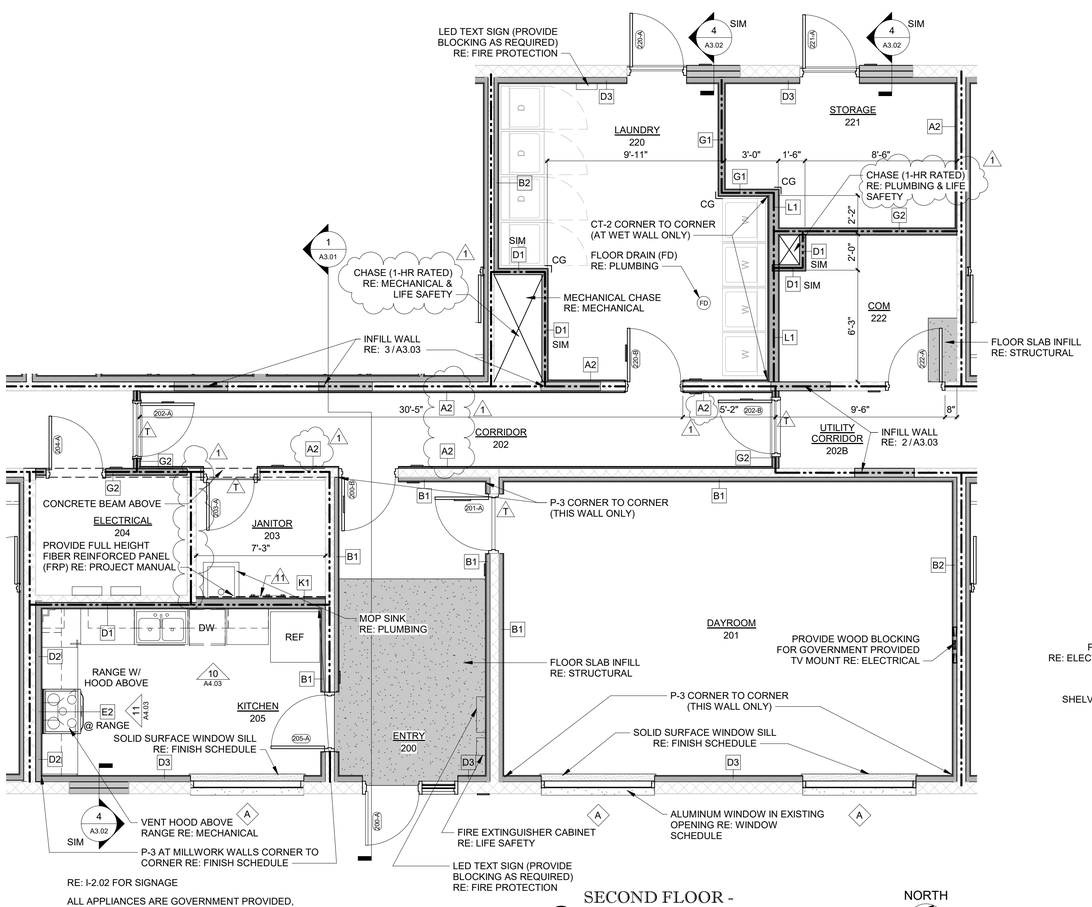

RE: I-2.02 FOR SIGNAGE

ALL APPLIANCES ARE GOVERNMENT PROVIDED, UNLESS OTHERWISE NOTED.

2 SECOND FLOOR - ENLARGED COMMON AREA
1/4" = 1'-0"

NORTH

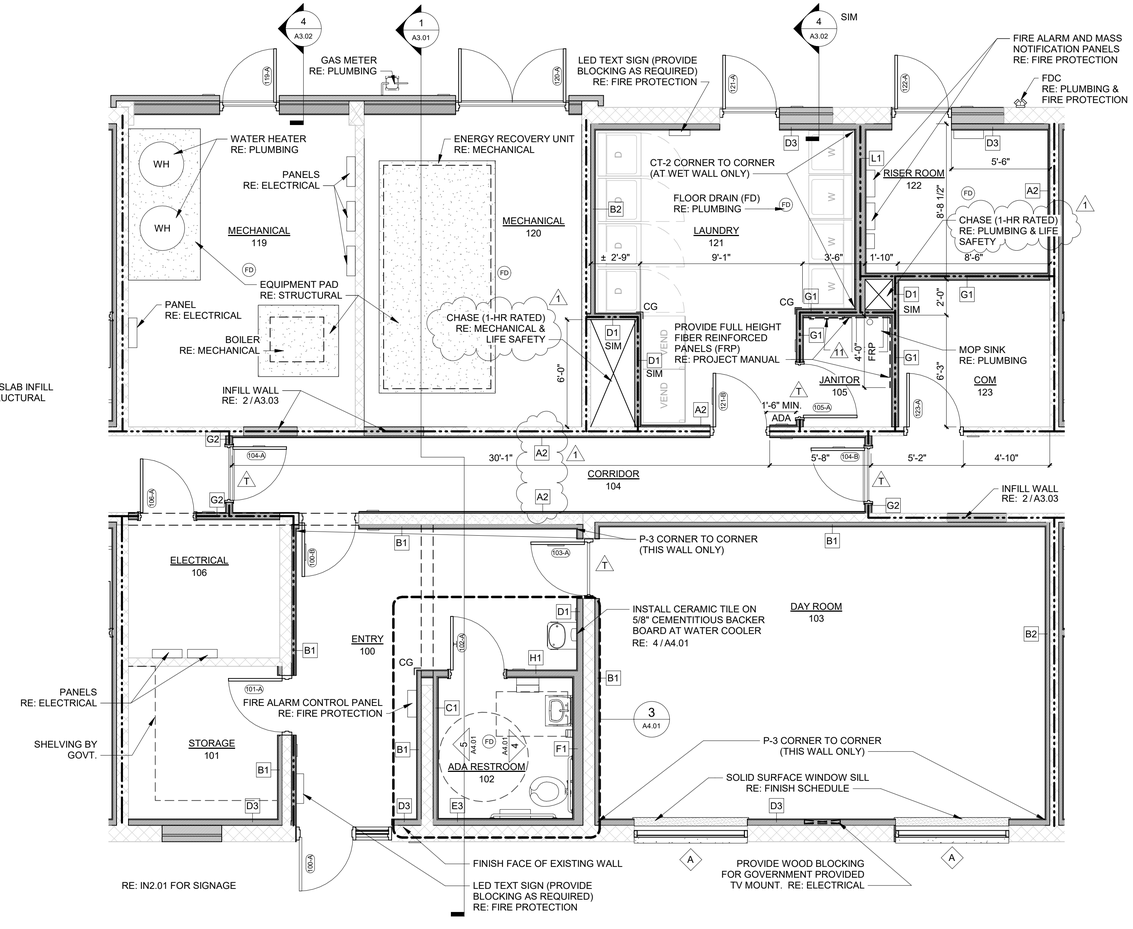

RE: IN2.01 FOR SIGNAGE

1 FIRST FLOOR - ENLARGED COMMON AREA
1/4" = 1'-0"

NORTH

SCALE: 1/2" = 1'-0" SCALE: 1/4" = 1'-0"

LITTLE ROCK A.F.B.
ARKANSAS

HGL Construction

CLEMENTS & ASSOCIATES
ARCHITECTURE, INC.
507 MAIN STREET
NORTH LITTLE ROCK, ARKANSAS 72114
PHONE: 501-375-3380
WWW.CLEMENTSARCHITECTS.COM

REGISTERED ARCHITECT Clements & Associates Architecture, Inc. No. C167 STATE OF ARKANSAS 4/26/24

No.	Revision/Issue	Date	BY	APP'D
1	100 REVISED SUBMITTAL	4/26/24		

PROJECT TITLE
REPAIR (SUS) AIRMEN DORMITORY BLDG 854

SHEET TITLE
ENLARGED PLANS

DRAWN BY HRS, BD, DR	LEAD DESIGNER C&A
TECH REVIEWER HRS	PROJECT NUMBER NKAK 21-1034
DESIGNED BY C&A	SHEET A4.01
DATE 29 FEB. 2024	
SCALE AS NOTED	45 OF 100