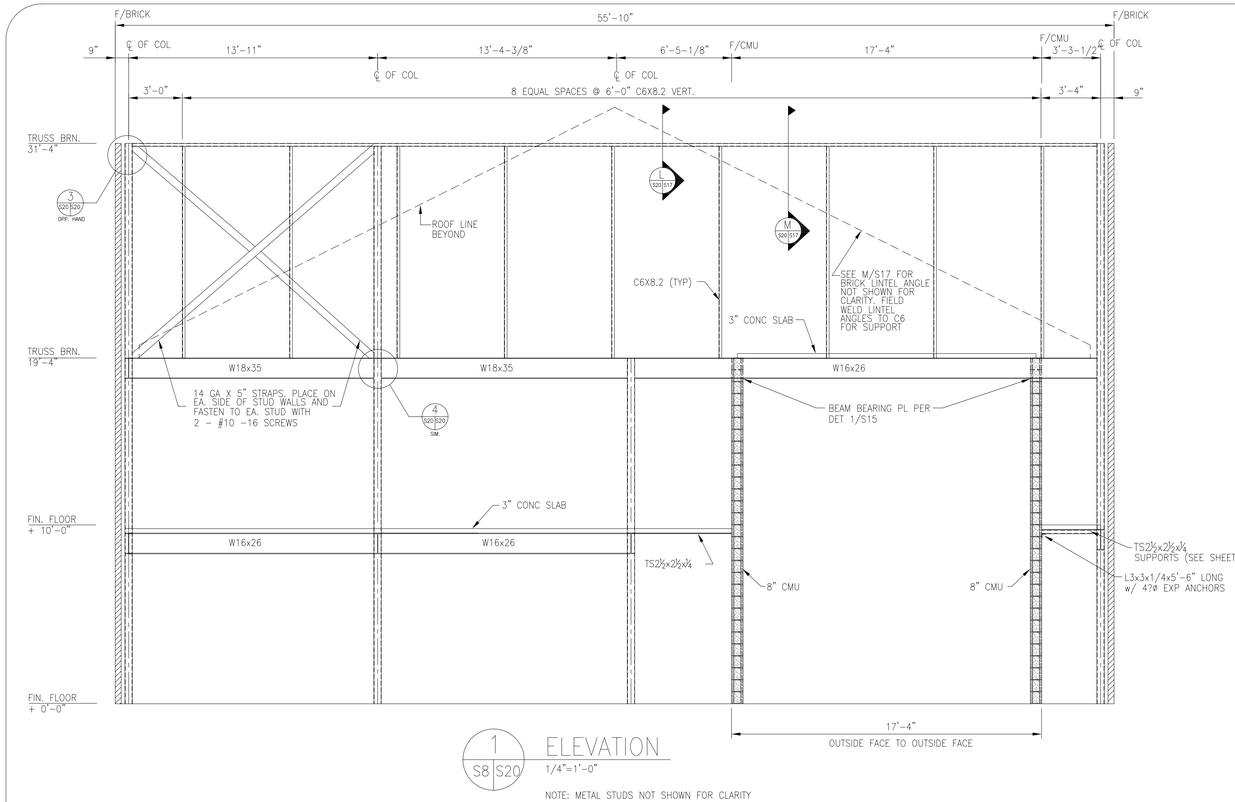

1 S8 S20 ELEVATION
1/4"=1'-0"
NOTE: METAL STUDS NOT SHOWN FOR CLARITY

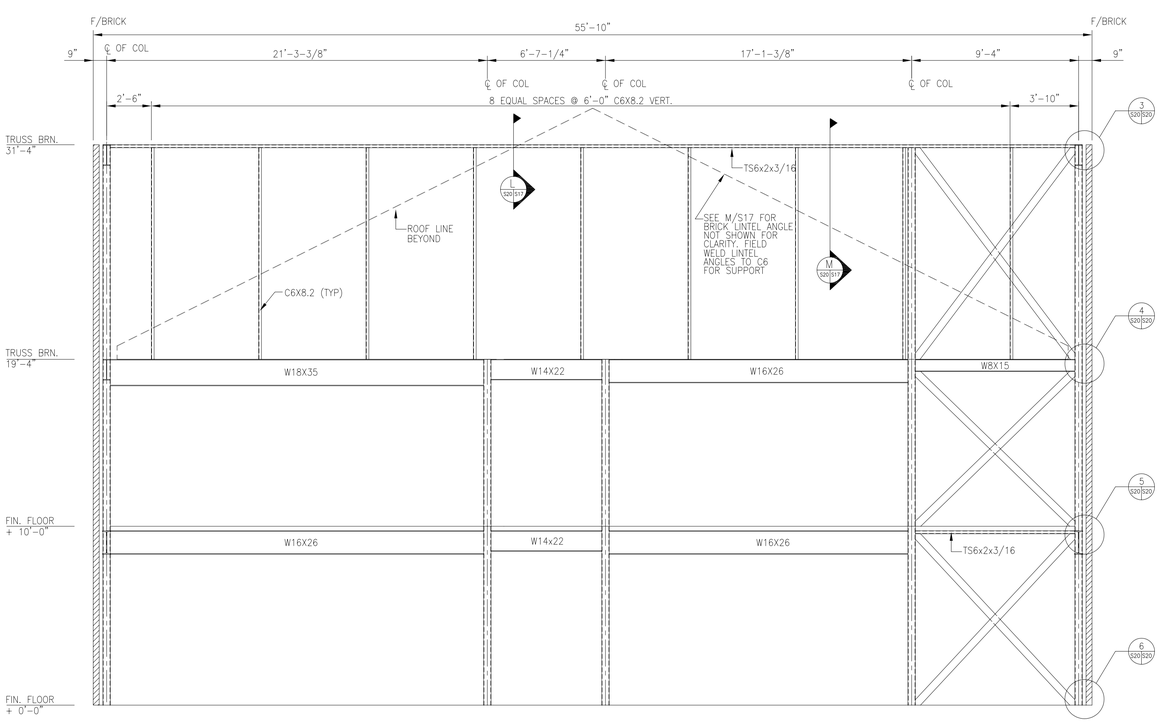

2 S8 S20 ELEVATION
1/4"=1'-0"
NOTE: METAL STUDS NOT SHOWN FOR CLARITY

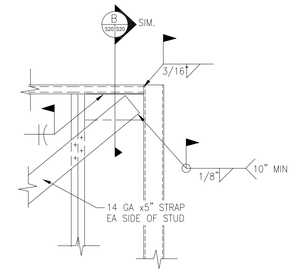

3 S20 S20 DETAIL
NOT TO SCALE

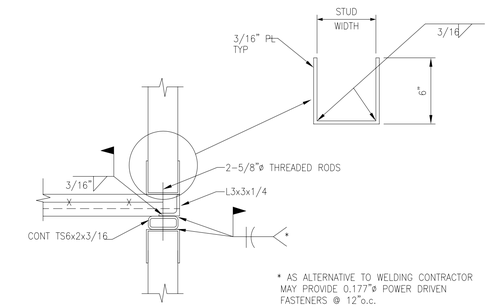

A S20 S20 SECTION
NOT TO SCALE

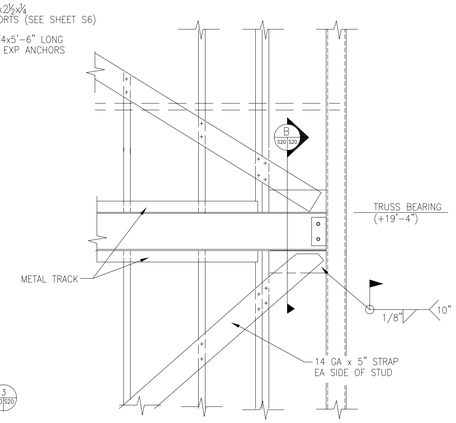

4 S20 S20 DETAIL
NOT TO SCALE

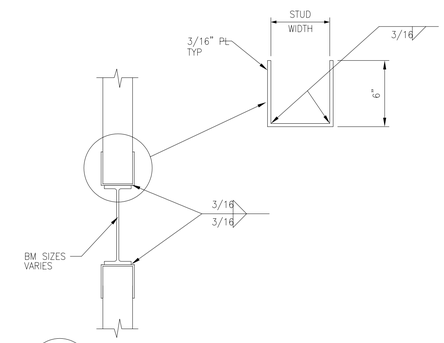

B S20 S20 SECTION
NOT TO SCALE

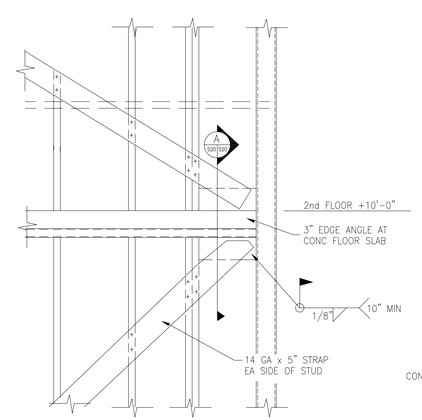

5 S20 S20 DETAIL
NOT TO SCALE

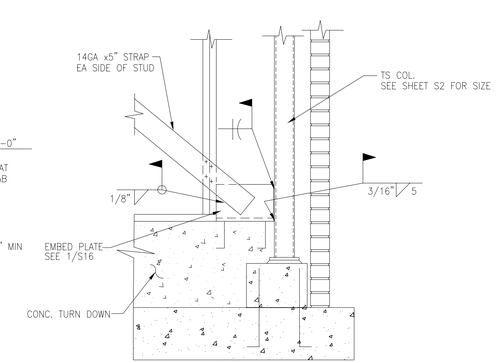

6 S20 S20 DETAIL
NOT TO SCALE

LITTLE ROCK A.F.B.
ARKANSAS

No.	Revision/Issue	Date	BY	APP'D
1	No Changes from Design to As-Built			

PROJECT TITLE
TEMPORARY LODGING FACILITY

SHEET TITLE
WALL ELEVATIONS, SECTION AND DETAILS
AS-BUILT

DRAWN BY	LEAD DESIGNER
TECH REVIEWER	FILE LOCATION
DESIGNED BY TVR	PROJECT NUMBER NKAK02-5001
DATE 28 MAY 2002	SHEET S20
SCALE 3/32"=1'-0"	60 OF 108

DRAWING: 48813S EDITED BY: CES DESIGNED BY: TVR DATE EDITED: 12-10-01