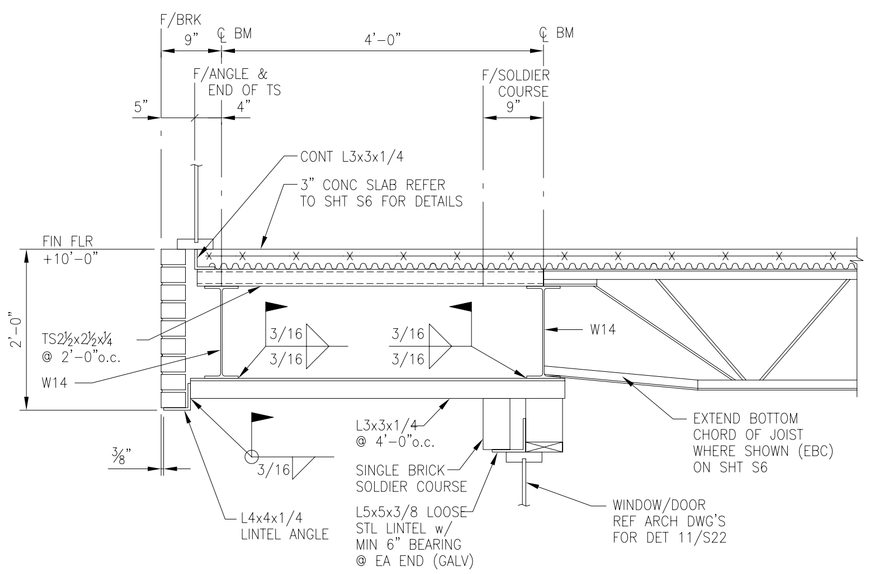


A
S6 S18
SECTION
3/4"=1'-0"

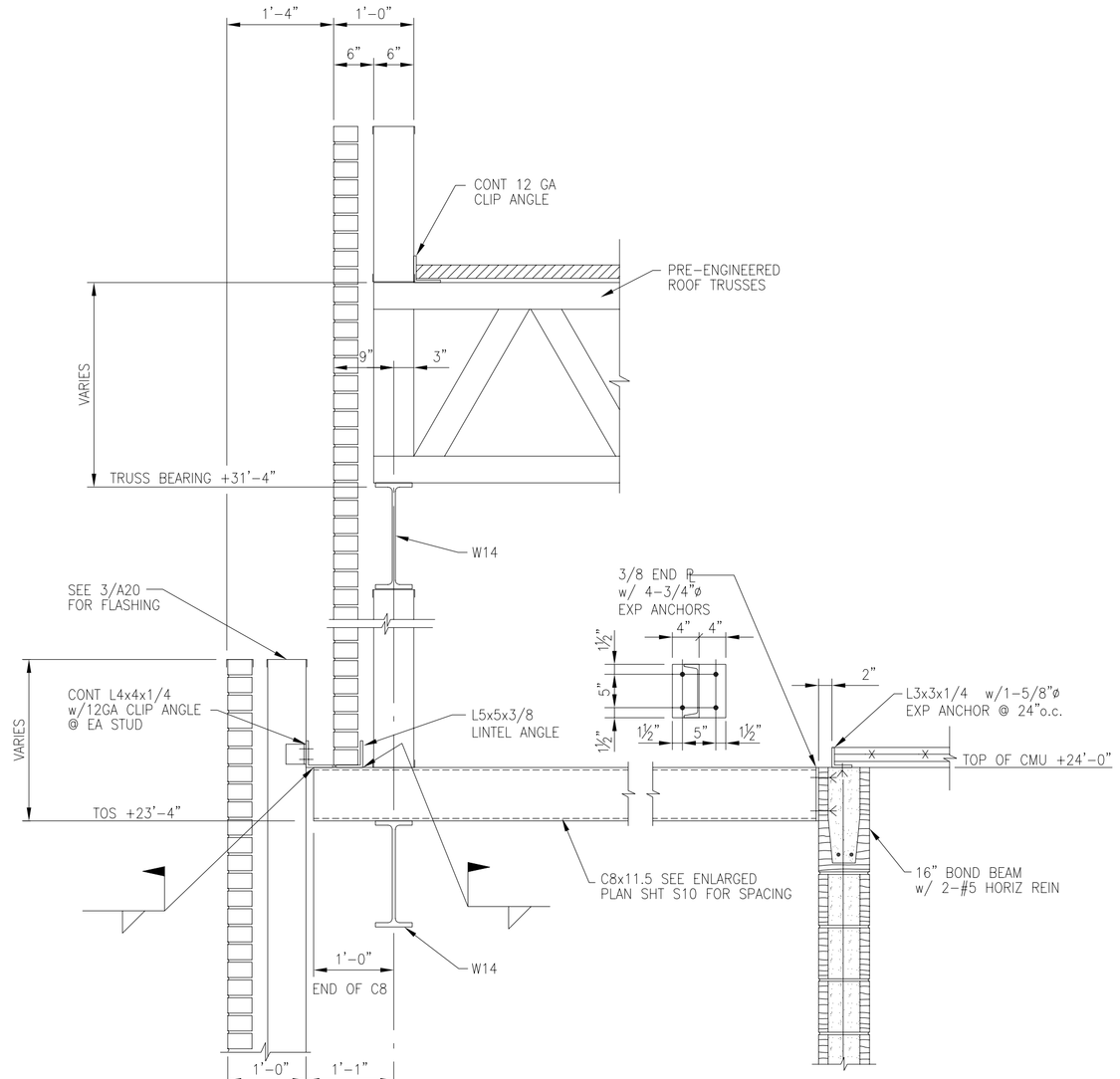


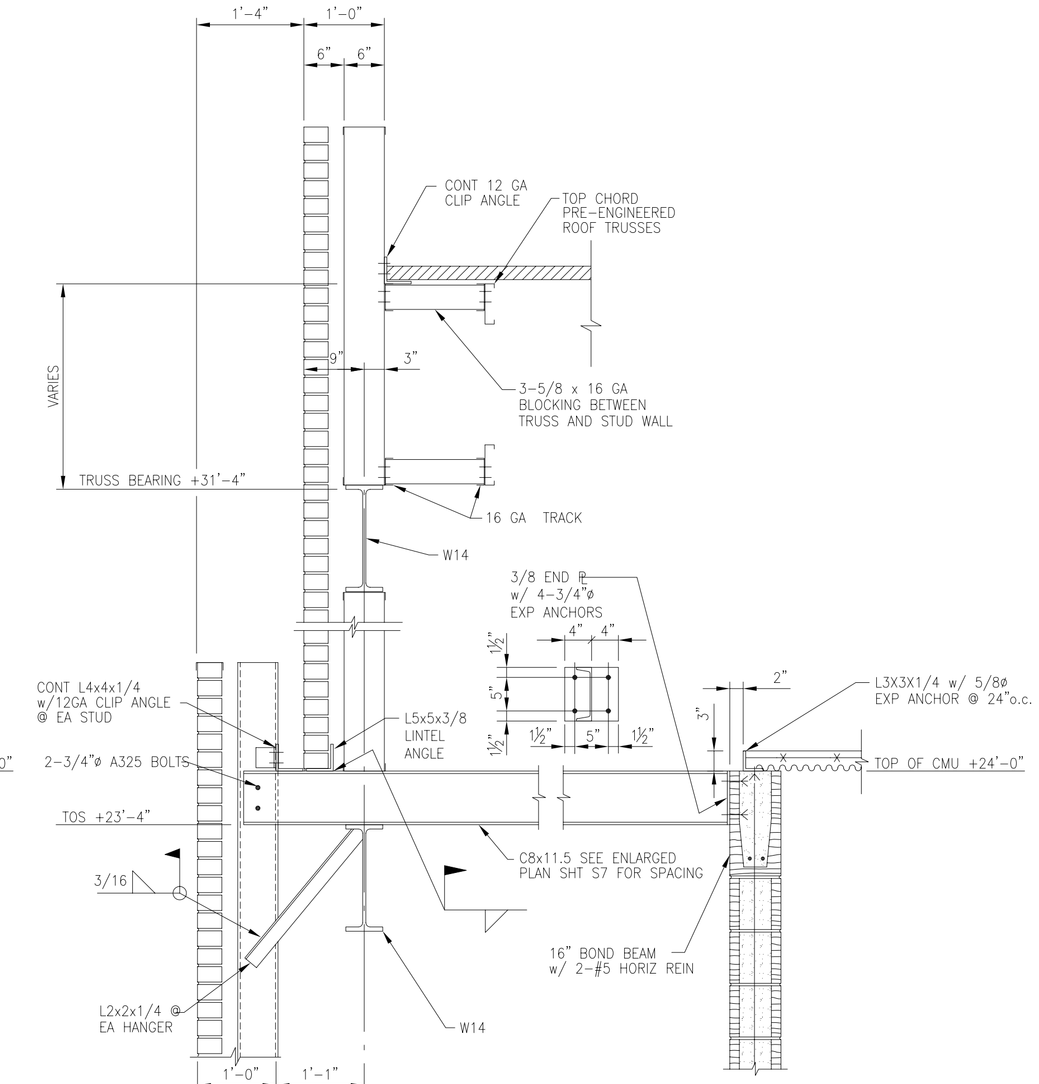


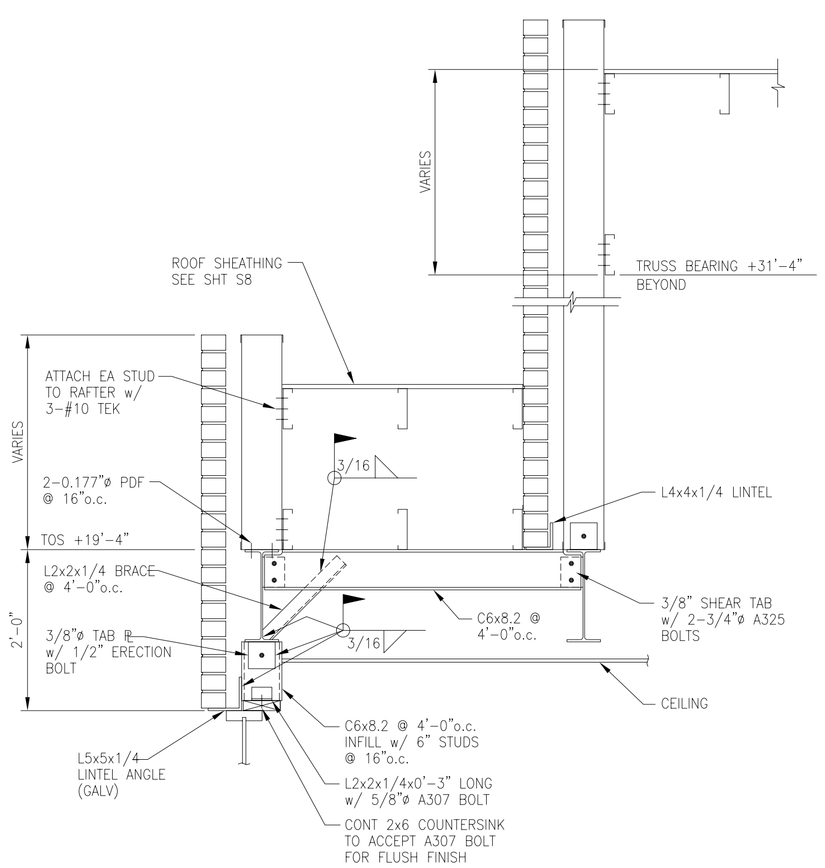


B
S8 S9 S18
SECTION HIGH ROOF IN FRONT
3/4"=1'-0"

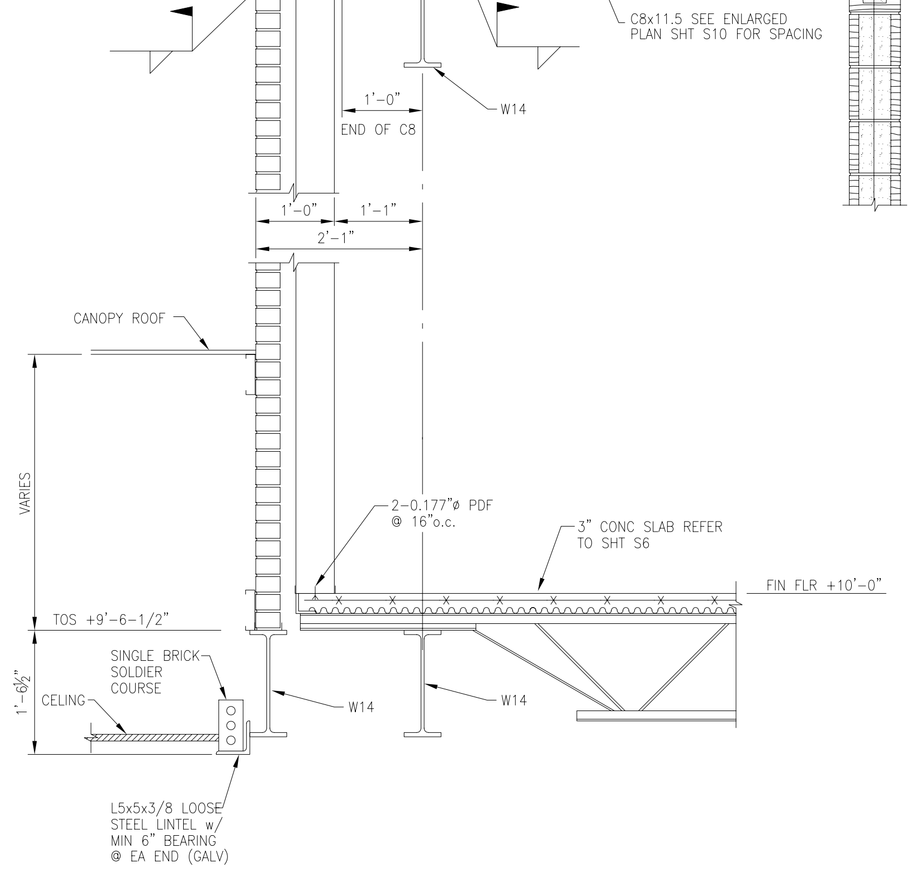


C
S10 S18
SECTION HIGH ROOF IN FRONT
3/4"=1'-0"

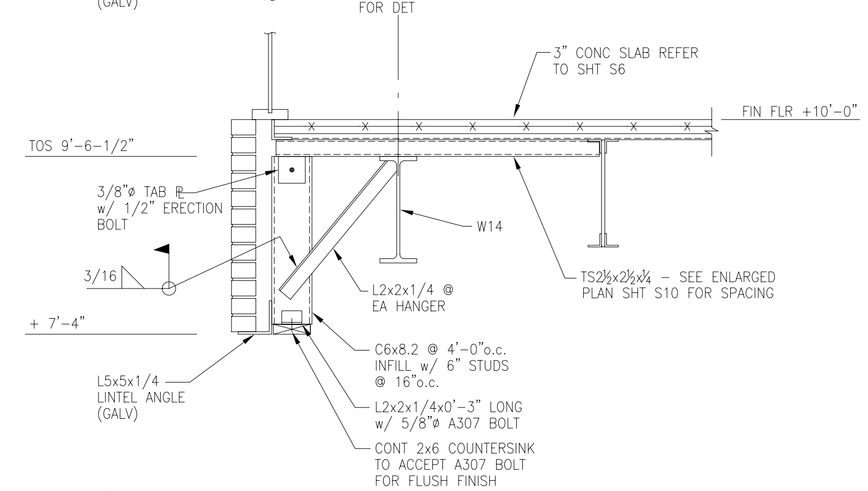


D
S8 S9 S18
SECTION HIGH ROOF IN FRONT
3/4"=1'-0"

AIR EDUCATION & TRAINING COMMAND

LITTLE ROCK A.F.B.
ARKANSAS

| No. | Revision/Issue | Date | BY | APP'D |
|---|---|---|---|---|
| 1 | No Changes from Design to As-Built | | | |

PROJECT TITLE
TEMPORARY LODGING FACILITY

SHEET TITLE
ROOF FRAMING SECTIONS AS-BUILT

| | |
|---|---|
| DRAWN BY TLK | LEAD DESIGNER |
| TECH REVIEWER | FILE LOCATION |
| DESIGNED BY TVR | PROJECT NUMBER NKAK02-5001 |
| DATE 28 MAY 2002 | SHEET S18 |
| SCALE 3/4"=1'-0" | 58 OF 108 |

DRAWING: 4881S18 EDITED BY: MO DESIGNED BY: TVR DATE EDITED: 12-10-01