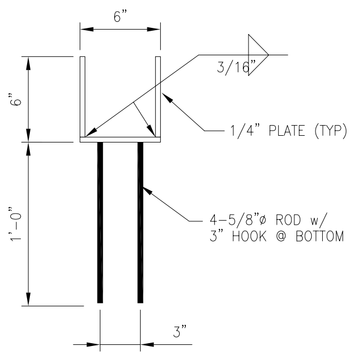

1 S15 S16 SECTION
NOT TO SCALE

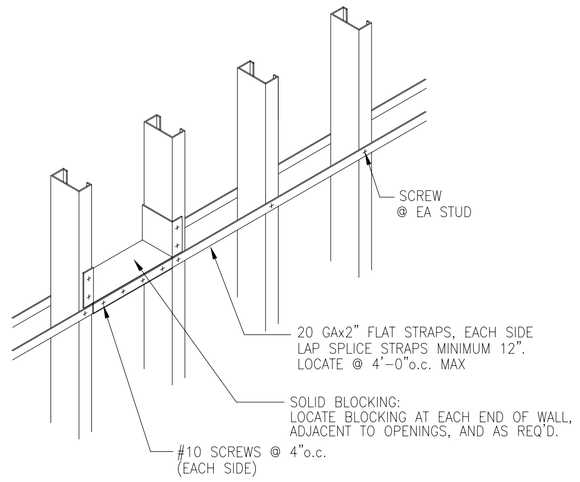

2 S6 S16 DETAIL–WALL BRIDGING
NOT TO SCALE
NOTE: ALTERNATE BRIDGEING DETAILS MAY BE SUBMITTED BY CONTRACTOR FOR APPROVAL.

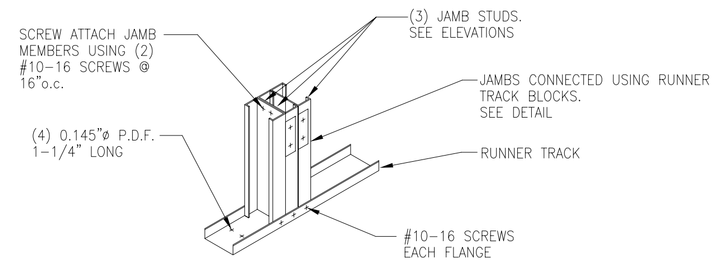

3 S6 S16 DETAIL–TYPICAL JAMB ANCHORAGE
NOT TO SCALE

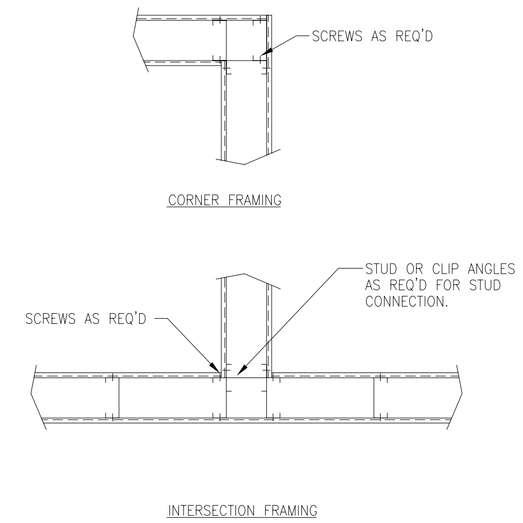

4 S6 S16 DETAIL–INTERSECTION FRAMING
NOT TO SCALE

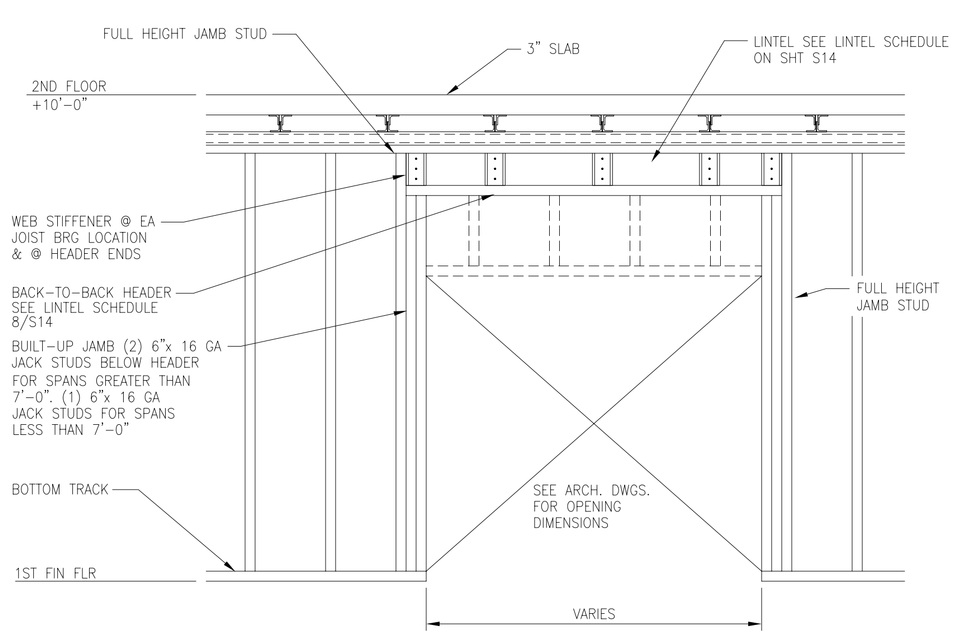

5 S6 S16 DETAIL–INTERIOR LINTEL ELEVATION
NOT TO SCALE ONE STORY DOOR OPENING

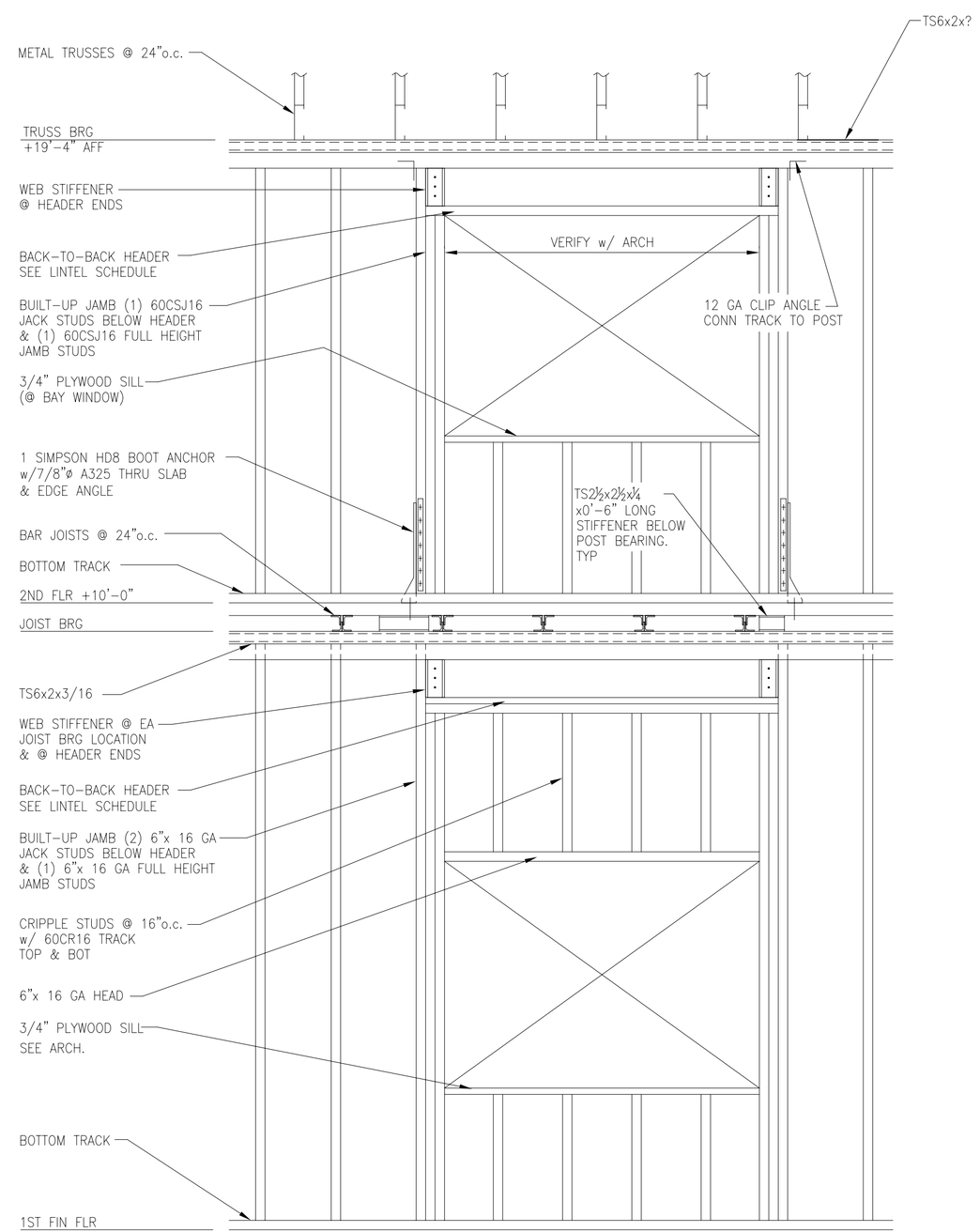

6 S6 S16 DETAIL–OPENING ELEVATION
NOT TO SCALE

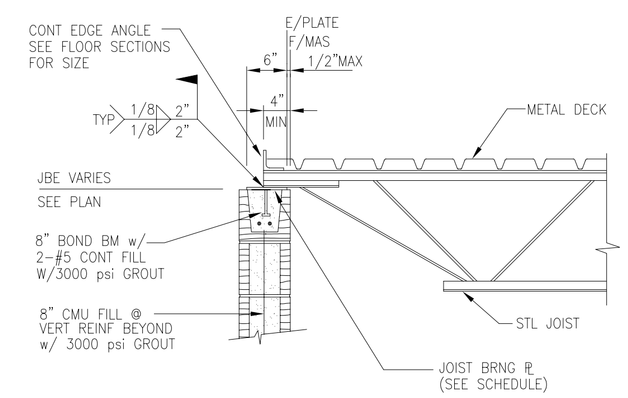

JOIST BEARING ON ONE SIDE
(SECTION)

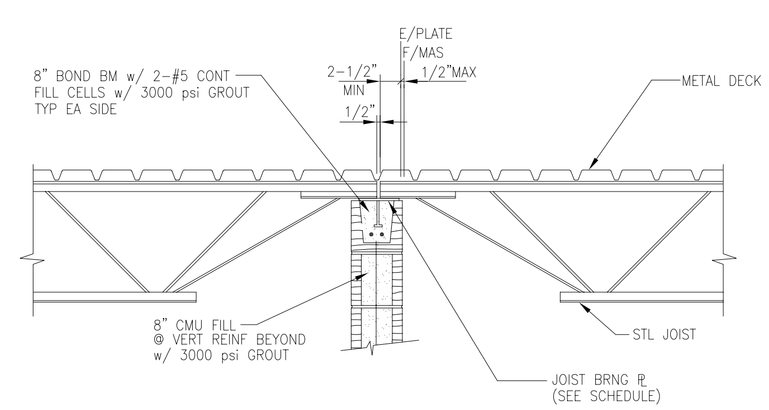

JOIST BEARING ON BOTH SIDES
(SECTION)

BEARING PLATE SCHEDULE		
	JST ONE SIDE	
8" CMU	3/8x6"x0'-8"	3/8x7"x0'-8"

*ALL BEARING ℞'s TO HAVE
2-1/2"ø x4" H. STUDS

7 S6 S16 DETAIL–STEEL JOISTS BEARING ON MASONRY
NOT TO SCALE

LITTLE ROCK A.F.B.
ARKANSAS

No.	Revision/Issue	Date	BY	APP'D
1	No Changes from Design to As-Built			

PROJECT TITLE
TEMPORARY LODGING FACILITY

SHEET TITLE
ROOF FRAMING SECTIONS AS-BUILT

DRAWN BY TLK	LEAD DESIGNER
TECH REVIEWER	FILE LOCATION
DESIGNED BY TVR	PROJECT NUMBER NKAK02-5001
DATE 28 MAY 2002	SHEET S16
SCALE 3/4"=1'-0"	56 OF 108

DRAWING: 48813S16 EDITED BY: MO DESIGNED BY: TVR DATE EDITED: 12-11-01