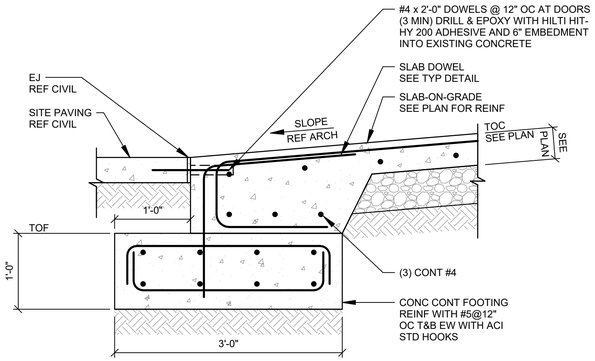

1 DETAIL

SCALE: 1" = 1'-0"

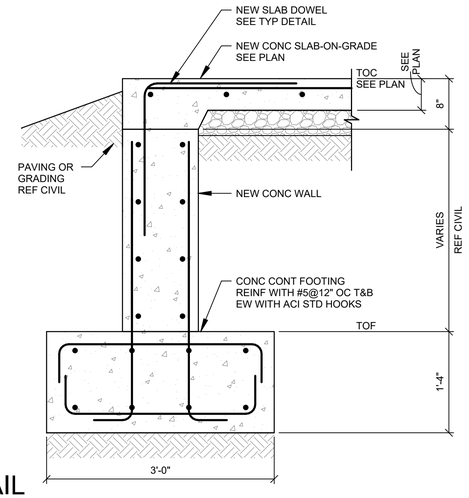

2 DETAIL

SCALE: 1" = 1'-0"

REV #	DATE	DESCRIPTION	APP'D

APPROVED
CHIEF ENGINEER
APPROVED
CIVIL ENGINEER

NKAK 22-1076
B718 DORM
LITTLE ROCK AFB

DETAILS (1)

STRUCTURAL CONCRETE DETAILS

AIR MOBILITY COMMAND

19TH CIVIL ENGINEER SQUADRON
LITTLE ROCK, ARKANSAS

DATE: SEPT. 2026
DESIGNED BY: JG
DRAWN BY: KNS
BUILDING NO.: 2600756
PROJECT NO.:
SHEET REF.: S-311
SHEET NO.: 1 OF XX

STATUS:65% PRELIMINARY DESIGN