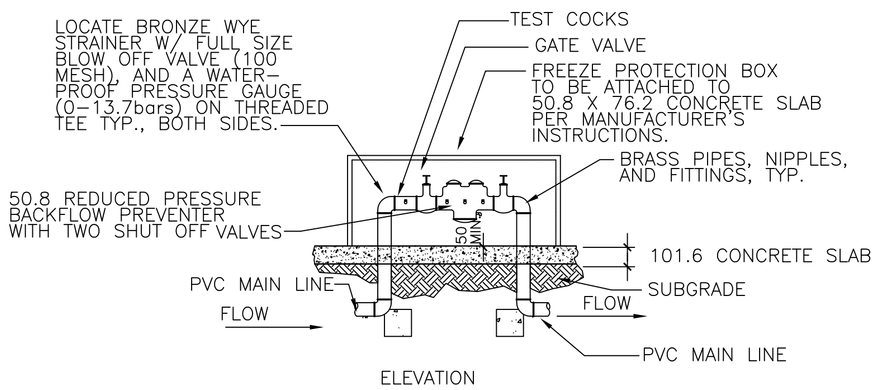

3.1 ANCHOR BOLTS SHALL BE LOCATED ON EACH CORNER AND TWO ON EACH SIDE OF FREEZE PROTECTION BOX.

1 BACKFLOW PREVENTER
L102 L501 SCALE: N.T.S

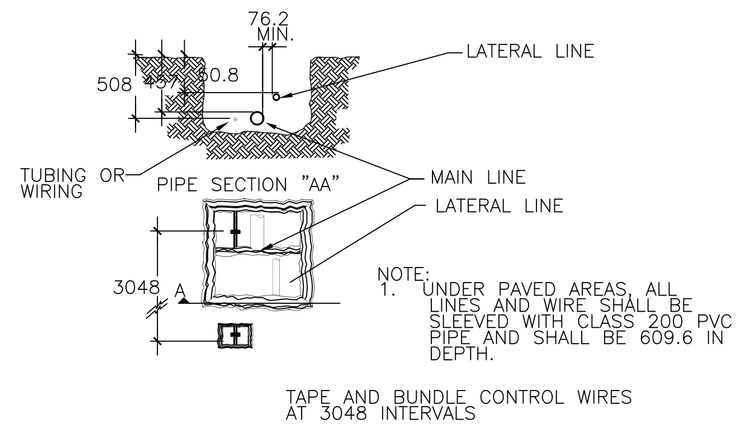

2 PIPE PLAN
L102 L501 SCALE: N.T.S

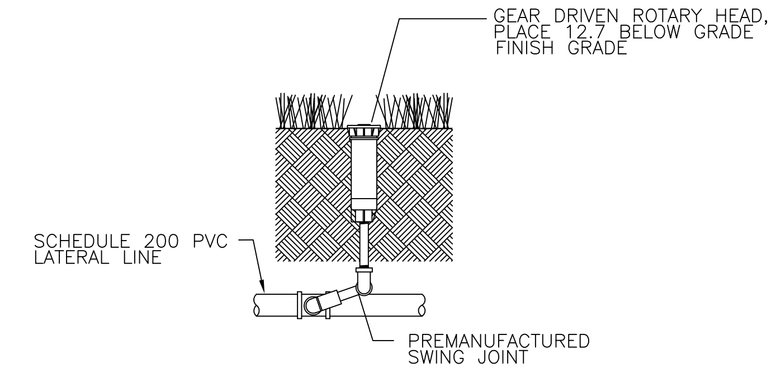

3 POP-UP ROTOR HEAD DETAIL
L102 L501 SCALE: N.T.S

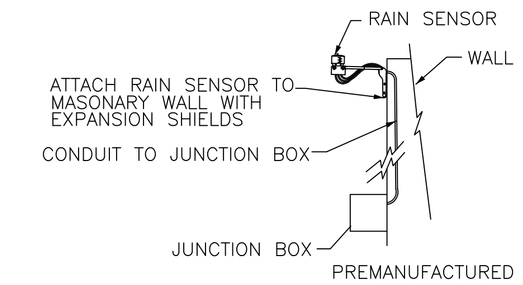

4 RAIN SENSOR
L102 L501 SCALE: N.T.S

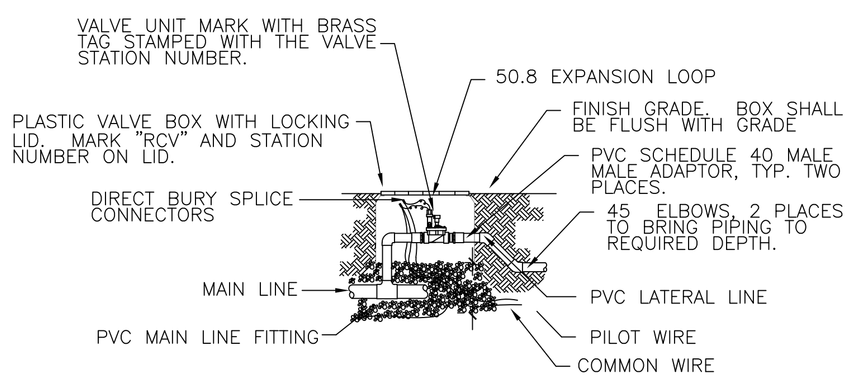

5 VALVE DETAIL
L102 L501 SCALE: N.T.S

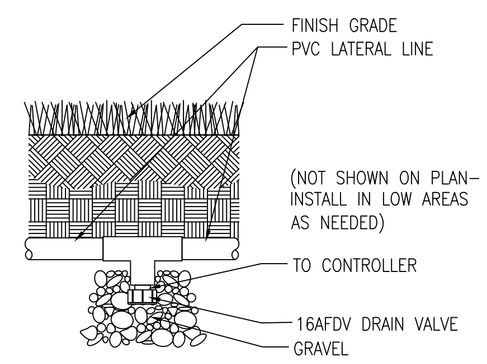

6 AUTOMATIC DRAIN VALVE
L102 L501 SCALE: N.T.S

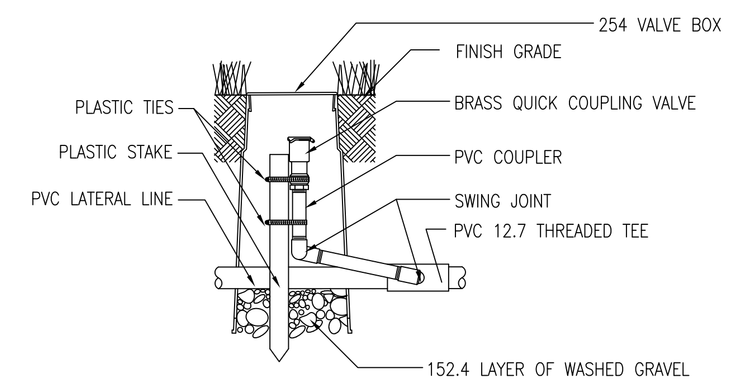

7 QUICK COUPLING VALVE & BOX
L102 L501 SCALE: N.T.S

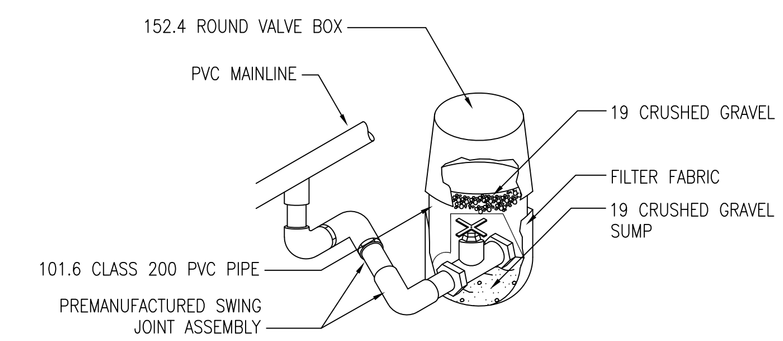

8 MANUAL DRAIN VALVE
L102 L501 SCALE: N.T.S

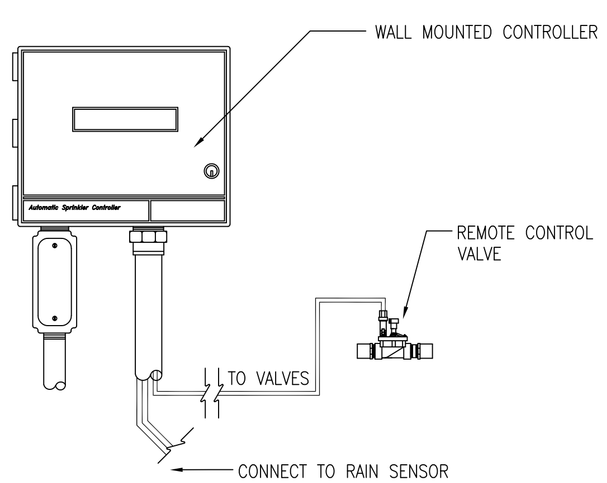

10 CONTROLLER AND VALVES
L102 L501 SCALE: N.T.S

* USE RAINBIRD ST-03 GRAY/PT-55 OR EQUIVALENT

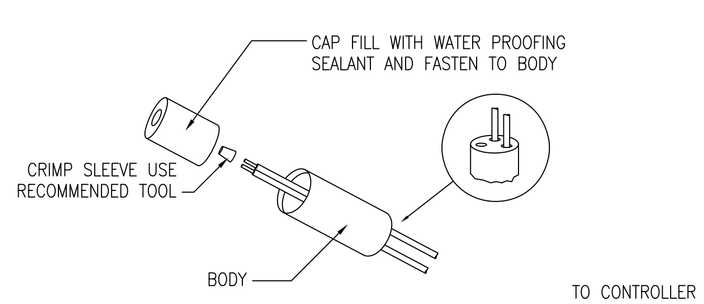

11 WIRE CONECTION
L102 L501 SCALE: N.T.S

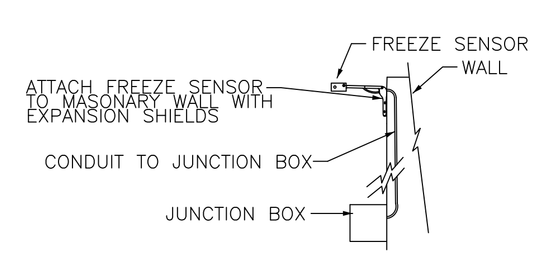

12 FREEZE SENSOR
L102 L501 SCALE: N.T.S

U.S. ARMY CORPS OF ENGINEERS
LITTLE ROCK DISTRICT

Mark	Description	Date	Appr.	Mark	Description	Date	Appr.

Designed by: HWF
Drawn by: HWF
Contract Date:
Reviewed by: BEV
Drwg. Code:
File Name: 151001L-501
Plot date: 02/04/03
Plot scale: 1:1
Submitted by:
Atkins Benham, Inc.
Initiation No.: DACA03-03-R-0021
Contract No.: DACA03-03-B-

DEPARTMENT OF THE ARMY
U.S. ARMY CORPS OF ENGINEERS
LITTLE ROCK DISTRICT
LITTLE ROCK, ARKANSAS

Atkins Benham
(918) 425-1500 www.atkinsbenham.com
U.S. operation of Atkins, a group of companies
WS ATKINS

ADAL C-130J AIRCREW FUSELAGE TRAINER
LRAFB, LITTLE ROCK AR.
Project No. NKAK 043005

IRRIGATION DETAILS

Sheet Reference Number:
L-501
Sheet 19 of 91

Drawing: F:\2402151001 LRAFB C130J FUSELAGE TRAINER\20_CAD\L\151001L-501 Saved: 03/31/2003 10:19
XRefs: 151001G-BS001.DWG 151001L-DT02.DWG By: BEAG2753 DimScale: 1.00 (TM=0) 10:19