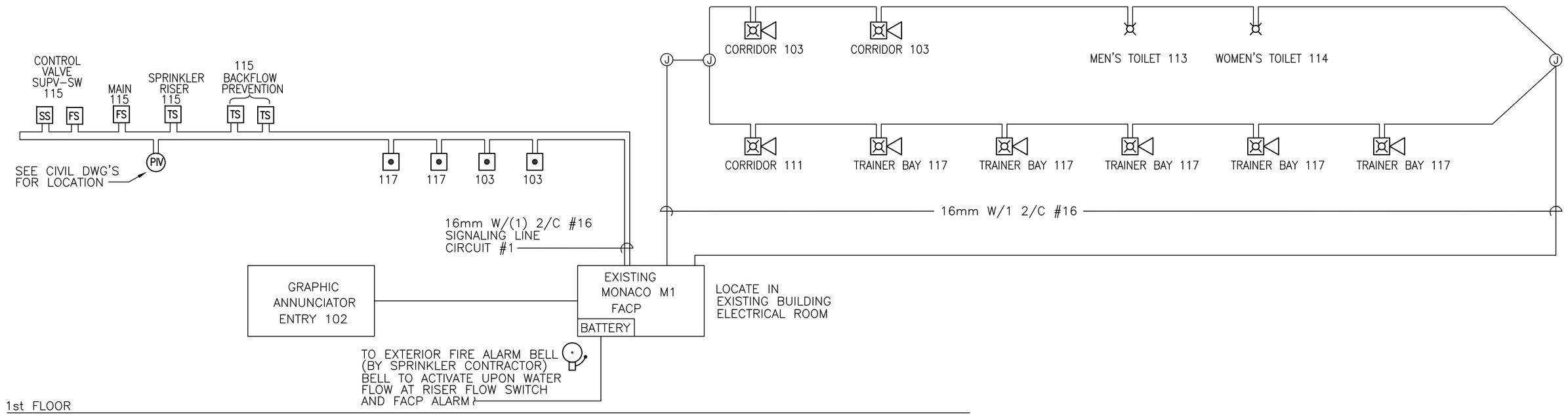

FIRE ALARM RISER DIAGRAM

NOT TO SCALE

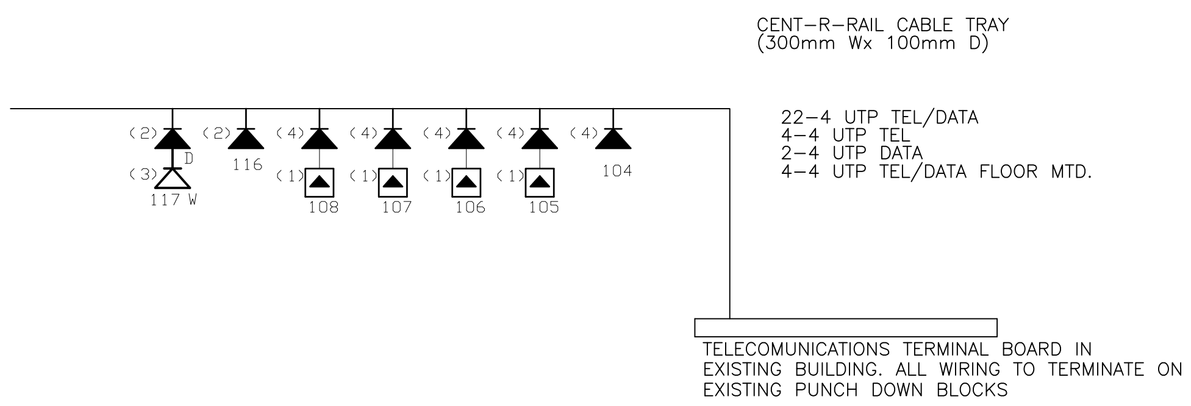

TELEPHONE & DATA SYSTEM RISER

NOT TO SCALE

U.S. ARMY CORPS OF ENGINEERS
LITTLE ROCK DISTRICT

Mark	Description	Date	Appr.	Mark	Description	Date	Appr.

Designed by: RW
Dwn by: MB
Contract Date:
Reviewed by: PWD
Chkd. Code:
File Name: 151001E-702
Submitted by:
Plot date: 02/24/03
Plot scale: 1:1
Contract No: DACA03-03-B-
Atkins Benham, Inc.
Initiation No: DACA03-03-R-0021

DEPARTMENT OF THE ARMY
U.S. ARMY CORPS OF ENGINEERS
LITTLE ROCK DISTRICT
LITTLE ROCK, ARKANSAS

Atkins Benham
(918) 492-1600 www.atkinsbenham.com
a member of the WS Atkins group of companies
WS Atkins

ADAL C-130J AIRCREW FUSELAGE TRAINER
LRAFB, LITTLE ROCK AR.
Project No. NWAK 043005

SPECIAL SYSTEMS RISER DIAGRAMS

Sheet Reference Number:
E-702
Sheet 91 of 91

Drawing: P:\USTAH\FAC\2403151001\20_CAD\E\151001E-702 Saved: 03/19/2003 16:17 By: DH DimScale: 1 (TM=0)
XRefs: 151001G-BS001.DWG