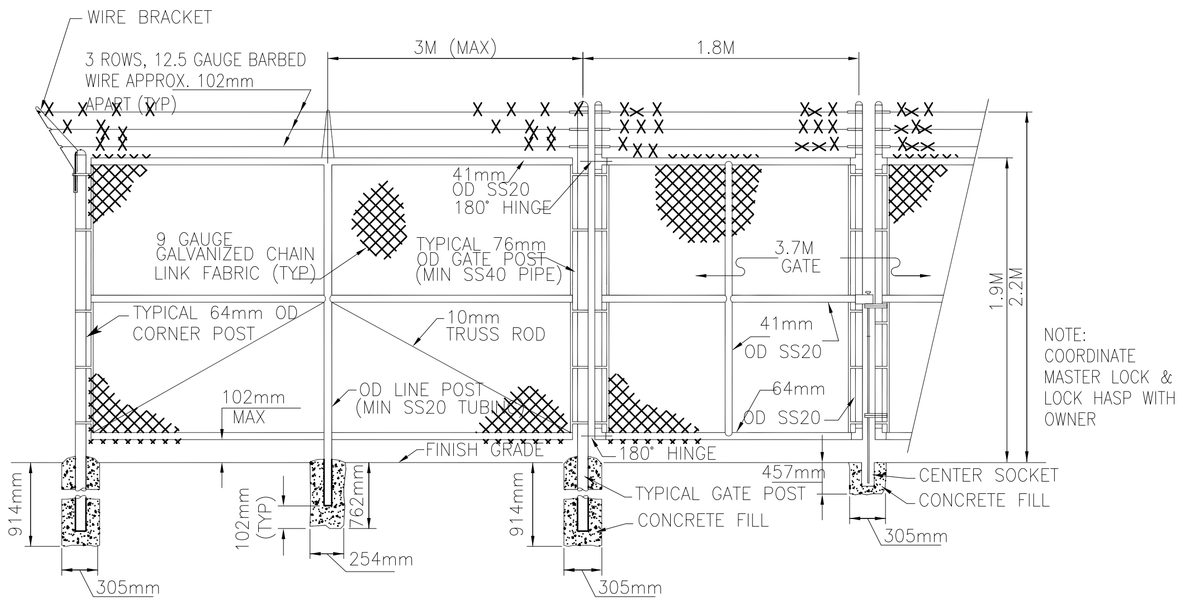

1 SECURITY FENCE
N.T.S.

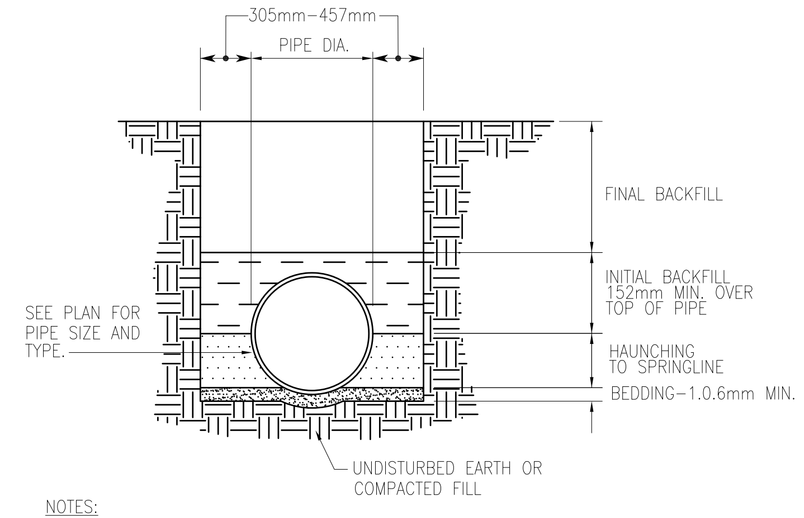

NOTES:

1. BEDDING SHALL BE SAND OR CRUSHED STONE CONFORMING TO ASTM D448, #67.

2. HAUNCHING SHALL BE GRANULAR SOILS FREE OF STONES LARGER THAN 13mm IN THEIR LARGEST DIMENSION, AND SHALL BE COMPACTED TO 95% MAX. DENSITY PER ASTM D1557. HAUNCHING SHALL BE WORKED BY HAND TO INSURE FULL SUPPORT OF THE PIPE.

3. INITIAL BACKFILL SHALL CONSIST OF GRANULAR MATERIAL OR ONSITE SOILS, FREE OF STONES LARGER THAN 13mm IN THEIR LARGEST DIMENSION, AND SHALL BE COMPACTED TO 95% MAX. DENSITY PER ASTM D1557.

4. FINAL BACKFILL, UNDER DRIVING SURFACES, SHALL CONSIST OF AHTD CLASS 7 AGGREGATE BASE, COMPACTED TO 95% OF MAXIMUM DRY DENSITY PER ASTM D698.

5. FINAL BACKFILL, IN AREAS NOT EXPECTED TO BE DRIVEN OVER, SHALL CONSIST OF ONSITE MATERIALS OR FILL, AND SHALL CONFORM TO THE APPLICABLE SPECIFICATIONS SECTIONS. FINAL BACKFILL SHALL BE COMPACTED TO 95% MAX. DENSITY PER ASTM D1557.

6. IN FILL AREAS, PIPE TRENCH SHALL BE EXCAVATED FROM THE EMBANKMENT. PIPE SHALL NOT BE PLACED ON TOP OF GROUND AND FILLED AROUND.

7. CONTRACTOR IS RESPONSIBLE TO ABIDE BY ALL APPLICABLE STATE, FEDERAL, AND LOCAL TRENCH SAFETY REGULATIONS, INCLUDING OSHA STANDARDS. OBSERVATION OF THE WORK BY THE OWNER AND/OR ENGINEER IS FOR CONFORMANCE TO THE SPECIFICATIONS ONLY, AND DOES NOT RELIEVE THE CONTRACTOR OF TRENCH SAFETY RESPONSIBILITY. IN NO CASE SHALL OWNER AND/OR ENGINEER BE LIABLE FOR TRENCH SAFETY.

2 PIPE BEDDING
NTS

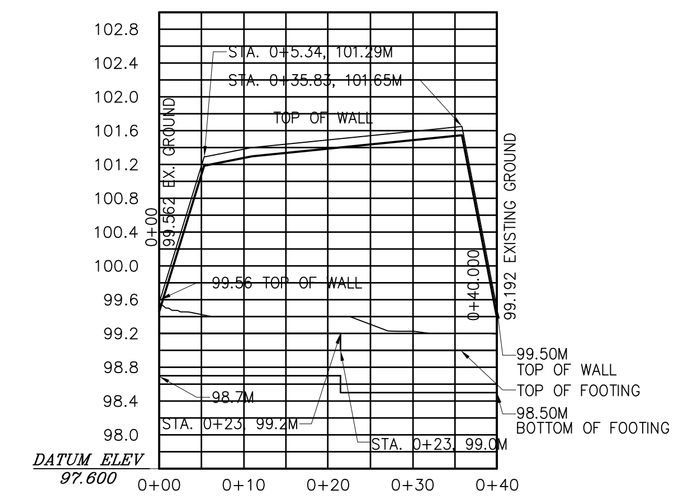

3 RETAINING WALL PROFILE
N.T.S.

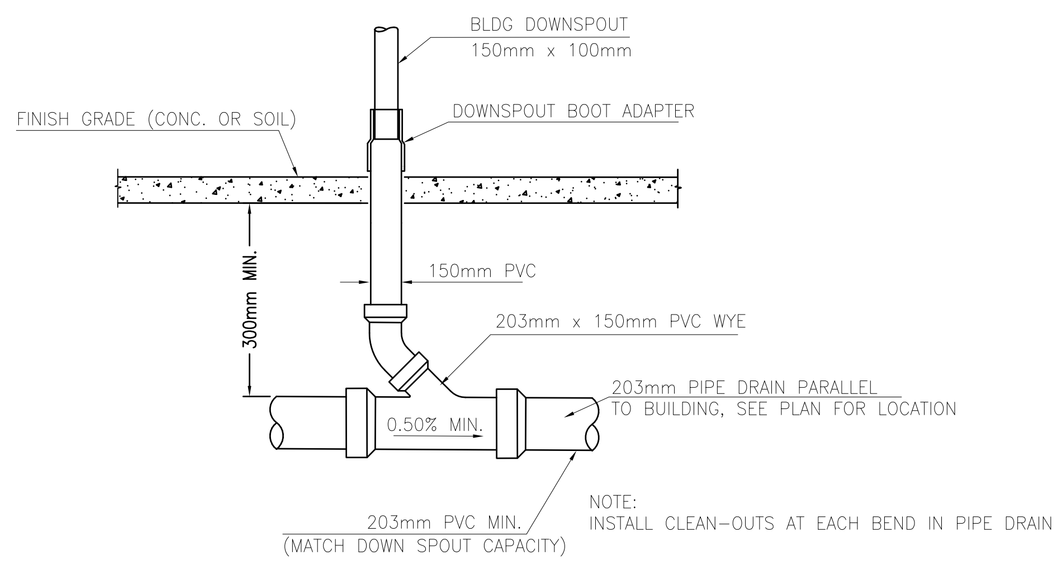

4 DOWNSPOUT CONNECTION TO PIPE DRAIN
N.T.S.

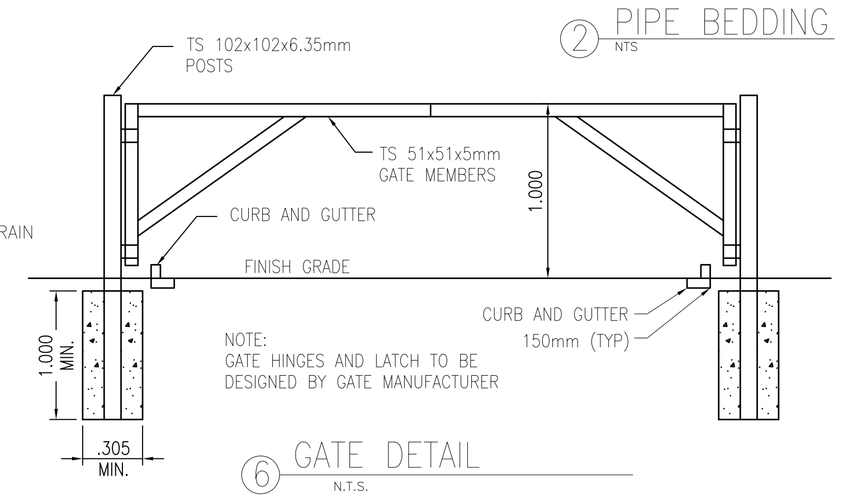

6 GATE DETAIL
N.T.S.

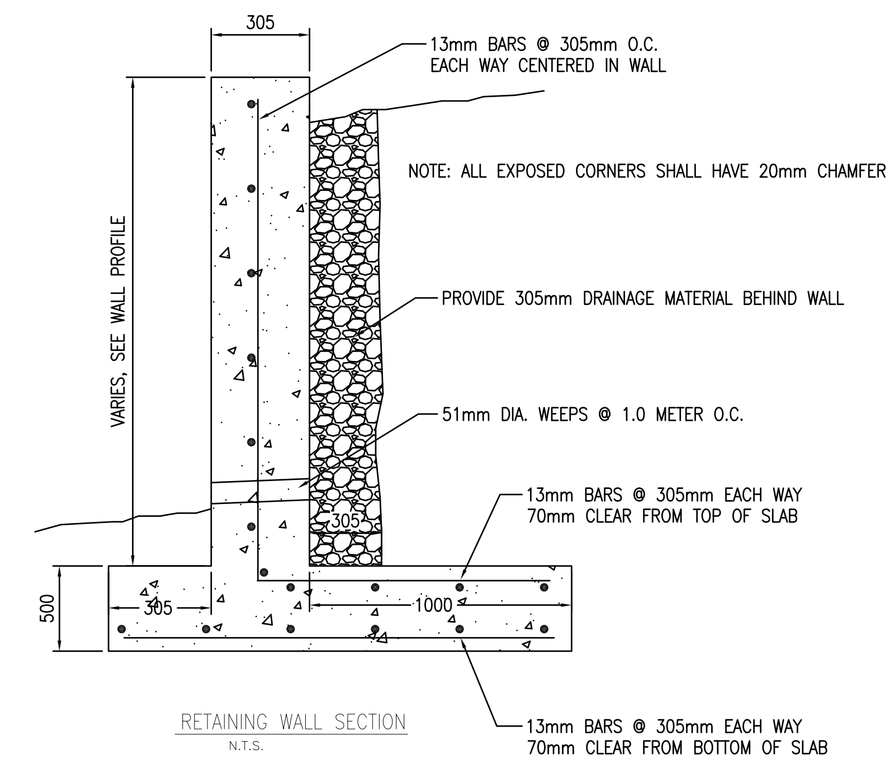

RETAINING WALL SECTION
N.T.S.

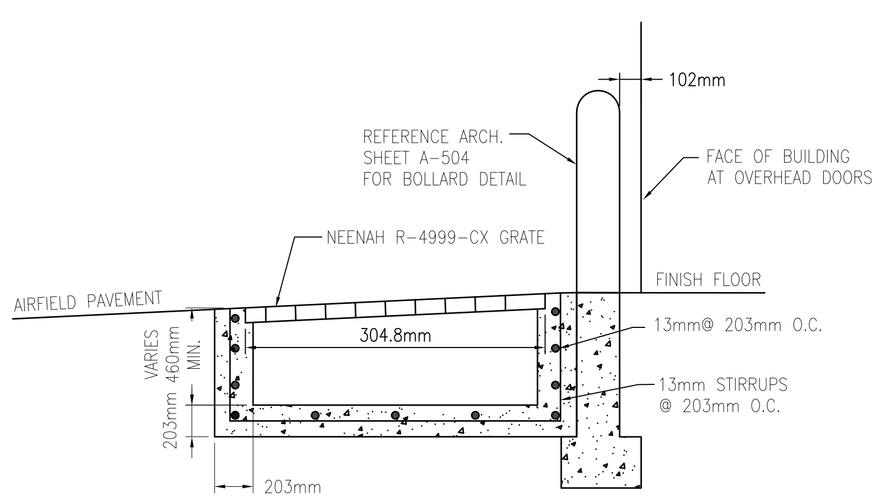

5 TRENCH GRATE DETAIL
N.T.S.

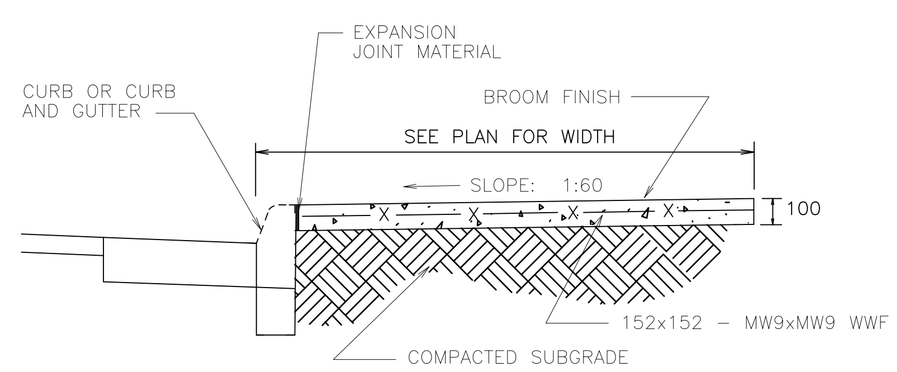

NOTE: TO BE USED WHERE ADJACENT TO CURB AND GUTTER

7 CONCRETE SIDEWALK
N.T.S.

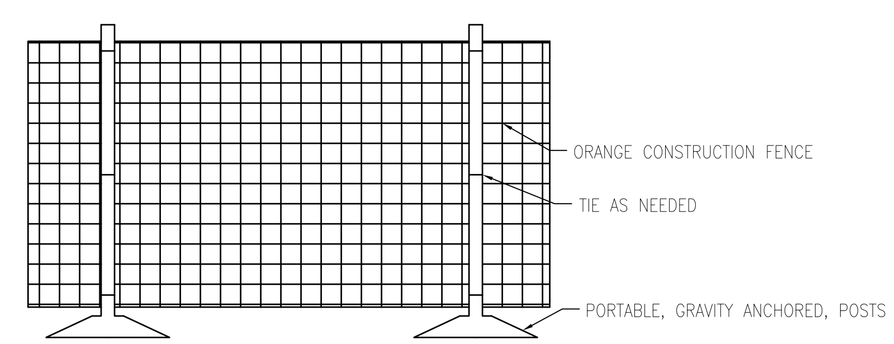

8 CONSTRUCTION FENCE DETAIL
N.T.S.