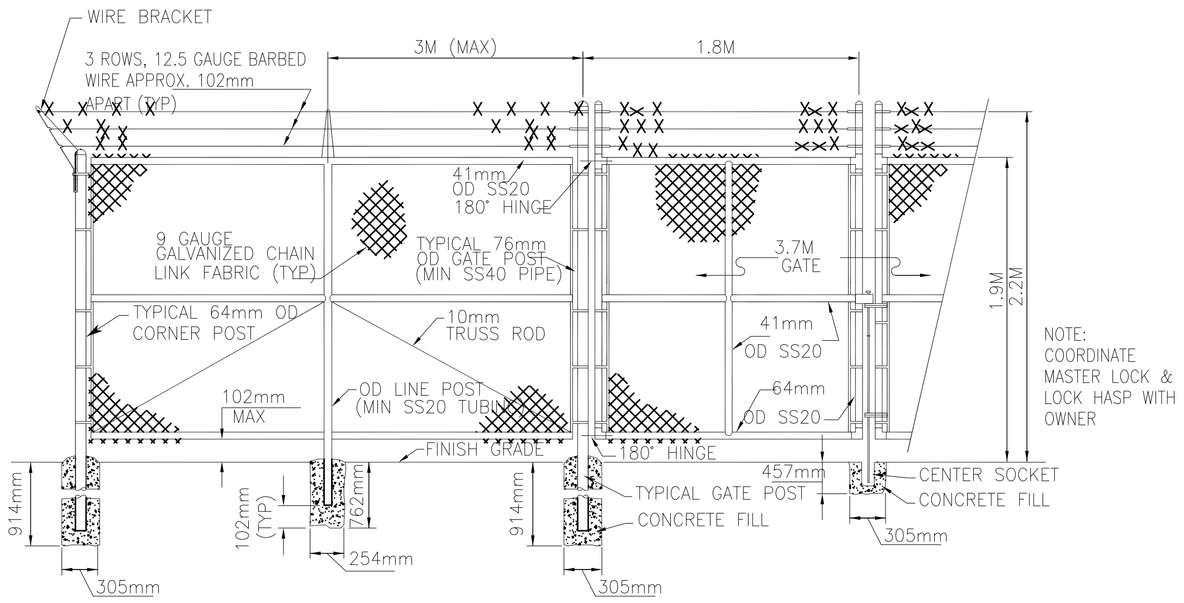

1 SECURITY FENCE
N.T.S.

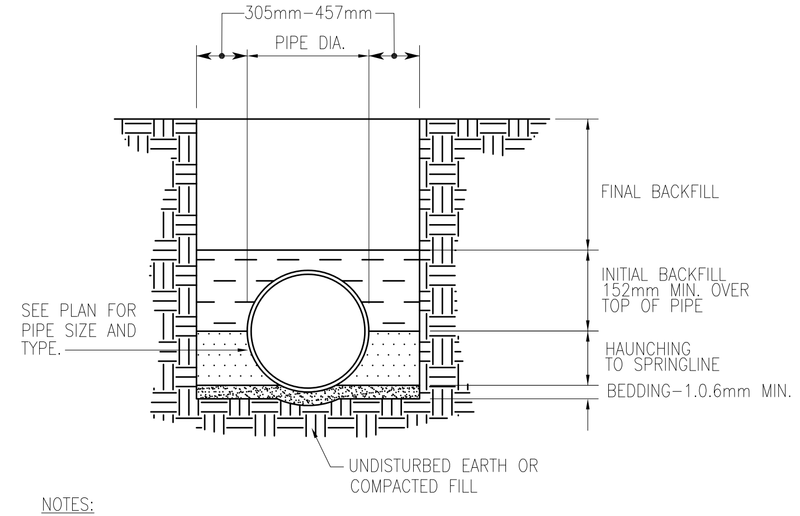

NOTES:

1. BEDDING SHALL BE SAND OR CRUSHED STONE CONFORMING TO ASTM D448, #67.

2. HAUNCHING SHALL BE GRANULAR SOILS FREE OF STONES LARGER THAN 13mm IN THEIR LARGEST DIMENSION, AND SHALL BE COMPACTED TO 95% MAX. DENSITY PER ASTM D1557. HAUNCHING SHALL BE WORKED BY HAND TO INSURE FULL SUPPORT OF THE PIPE.

3. INITIAL BACKFILL SHALL CONSIST OF GRANULAR MATERIAL OR ONSITE SOILS, FREE OF STONES LARGER THAN 13mm IN THEIR LARGEST DIMENSION, AND SHALL BE COMPACTED TO 95% MAX. DENSITY PER ASTM D1557.

4. FINAL BACKFILL, UNDER DRIVING SURFACES, SHALL CONSIST OF AHTD CLASS 7 AGGREGATE BASE, COMPACTED TO 95% OF MAXIMUM DRY DENSITY PER ASTM D698.

5. FINAL BACKFILL, IN AREAS NOT EXPECTED TO BE DRIVEN OVER, SHALL CONSIST OF ONSITE MATERIALS OR FILL, AND SHALL CONFORM TO THE APPLICABLE SPECIFICATIONS SECTIONS. FINAL BACKFILL SHALL BE COMPACTED TO 95% MAX. DENSITY PER ASTM D1557.

6. IN FILL AREAS, PIPE TRENCH SHALL BE EXCAVATED FROM THE EMBANKMENT. PIPE SHALL NOT BE PLACED ON TOP OF GROUND AND FILLED AROUND.

7. CONTRACTOR IS RESPONSIBLE TO ABIDE BY ALL APPLICABLE STATE, FEDERAL, AND LOCAL TRENCH SAFETY REGULATIONS, INCLUDING OSHA STANDARDS. OBSERVATION OF THE WORK BY THE OWNER AND/OR ENGINEER IS FOR CONFORMANCE TO THE SPECIFICATIONS ONLY, AND DOES NOT RELIEVE THE CONTRACTOR OF TRENCH SAFETY RESPONSIBILITY. IN NO CASE SHALL OWNER AND/OR ENGINEER BE LIABLE FOR TRENCH SAFETY.

2 PIPE BEDDING
NTS

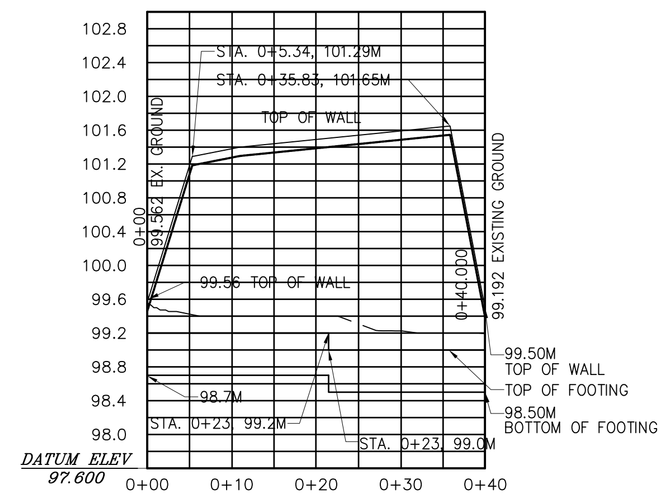

3 RETAINING WALL PROFILE
N.T.S.

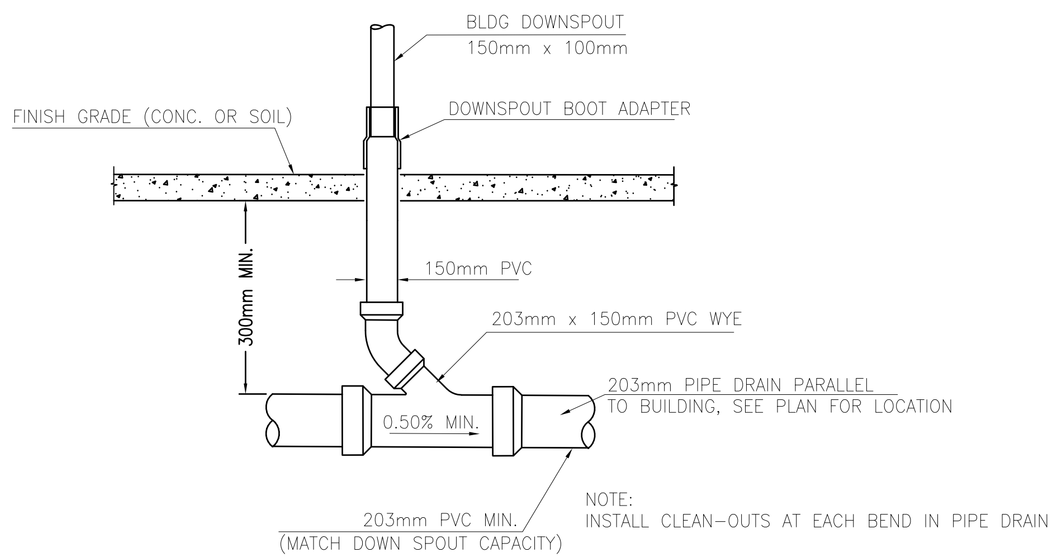

4 DOWNSPOUT CONNECTION TO PIPE DRAIN
N.T.S.

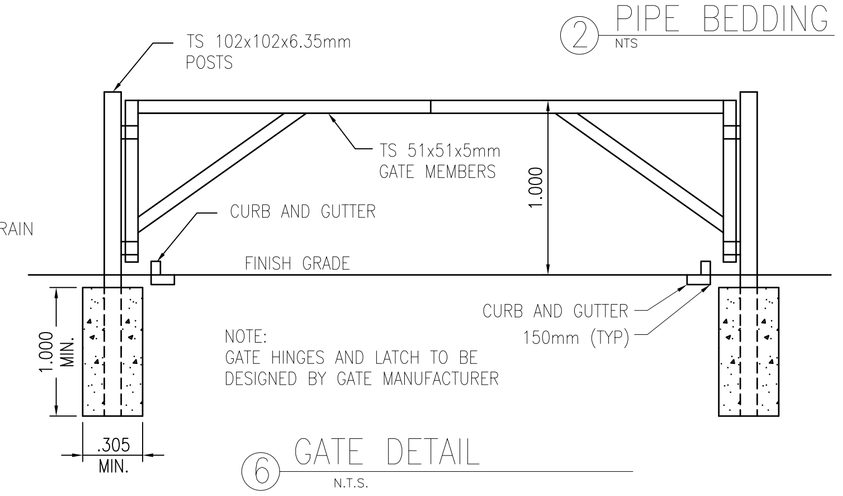

6 GATE DETAIL
N.T.S.

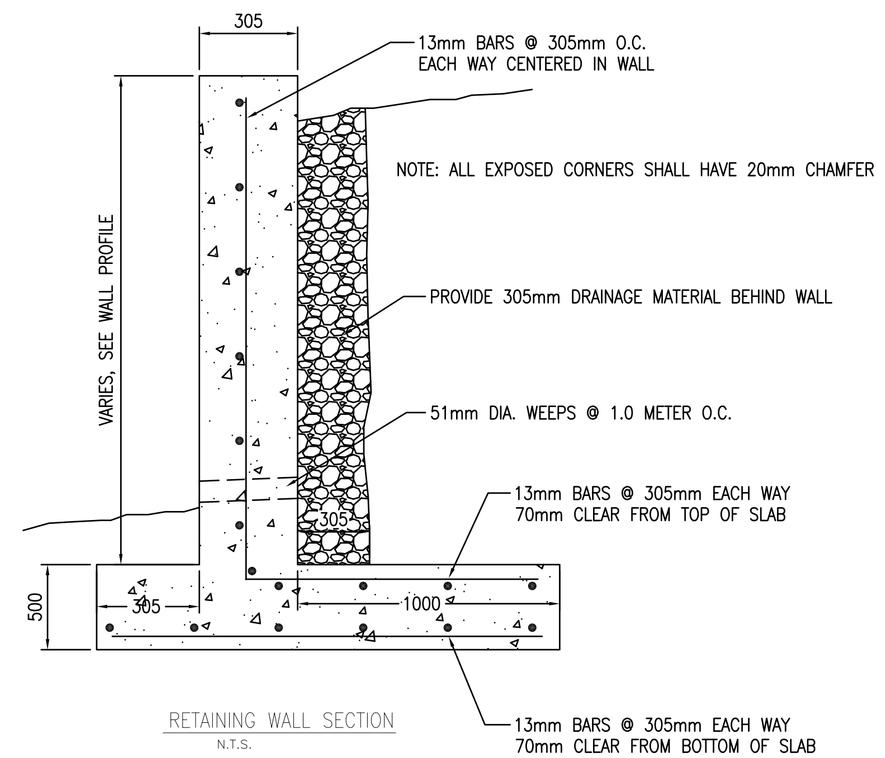

RETAINING WALL SECTION
N.T.S.

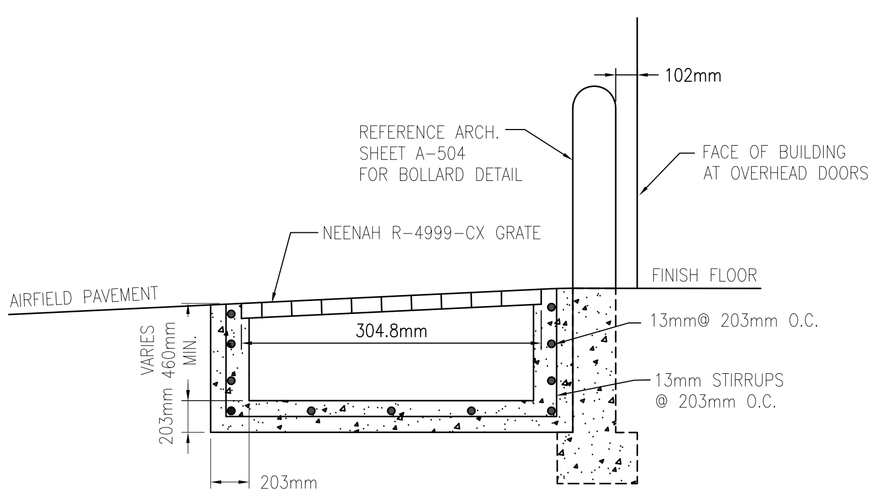

5 TRENCH GRATE DETAIL
N.T.S.

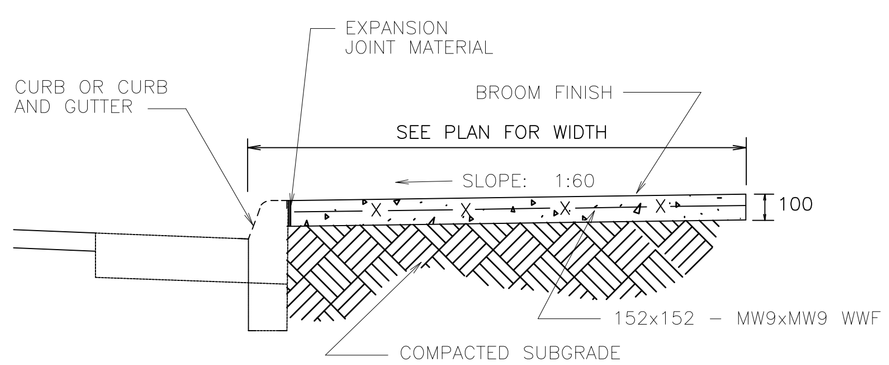

NOTE: TO BE USED WHERE ADJACENT TO CURB OR CURB AND GUTTER

7 CONCRETE SIDEWALK
N.T.S.

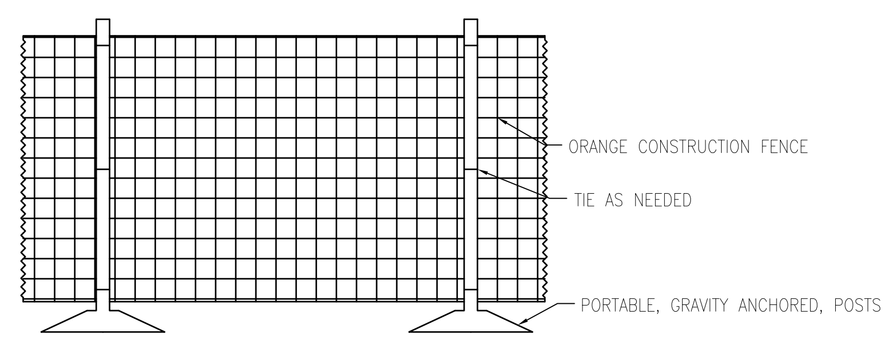

8 CONSTRUCTION FENCE DETAIL
N.T.S.

U.S. ARMY CORPS OF ENGINEERS
LITTLE ROCK DISTRICT

Mark	Description	Date	Appr.	Mark	Description	Date	Appr.

Designed by: | Drawn by: | Contract Date:
Reviewed by: | Dwg. Code: | File Name: 130303-000
Submitted by: Atkins Benham, Inc. | Plot date: 02/04/03
Initiation No.: DACA03-03-A-0031 | Plot scale: 1:1
Contract No.: DACA03-03-B-

DEPARTMENT OF THE ARMY
U.S. ARMY CORPS OF ENGINEERS
LITTLE ROCK DISTRICT
LITTLE ROCK, ARKANSAS

Atkins Benham
(918) 492-1600 www.atkinsbenham.com
a member of the WS Atkins group of companies
WS Atkins

ADAL C-130J AIRCREW FUSELAGE TRAINER
LRAFB, LITTLE ROCK AR
Project No. NKAK 043005

DETAILS

Sheet Reference Number:
C-403
Sheet 14 of 91

Drawing: P:\USTAH\FAC\240315100\20_CAD\C\151001C-403 Saved: 11/26/2002 08:19 By: mb DimScale: 1 (TM=0)
XRefs: 151001G-BS001.DWG