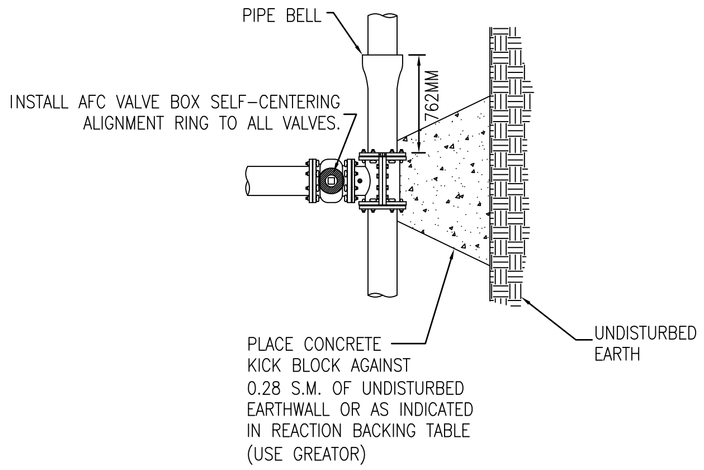

PLAN VIEW

GENERAL NOTES:

1. ALL EXPOSED CORNERS TO HAVE 19mm CHAMFER

2. ALL #13mm & #16mm REINFORCING BARS TO HAVE 38mm COVER, LARGER SIZES TO HAVE 51mm COVER. U.O.N.

3. PIPES SHALL CONNECT TO THE ENDS OR SIDES OF THE INLET. CONNECTION SHALL NOT BE MADE AT CORNERS OF INLET.

4. ALL REINFORCING BARS TO BE GRADE 60.

5. SEE SPECIFICATIONS FOR MANHOLE STEP REQUIREMENTS

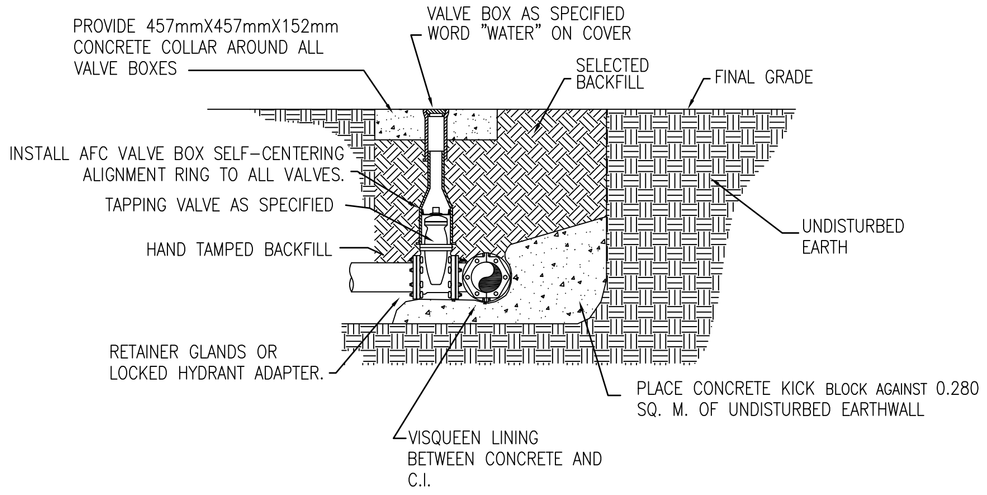

PROFILE VIEW

1 TAPPING VALVE DETAIL
NTS

PIPE SIZE mm	"X" mm	11.25 DEGREE BEND			22.5 DEGREE BEND			45 DEGREE BEND			90 DEGREE BEND			TEE OR CAP		
		"E" mm	BEARING AREA sq.m.	CONCRETE VOLUME cu.m	"E" mm	BEARING AREA sq.m.	CONCRETE VOLUME cu.m.	"E" mm	BEARING AREA sq.m.	CONCRETE VOLUME cu.m.	"E" mm	BEARING AREA sq.m.	CONCRETE VOLUME cu.m.	"E" mm	BEARING AREA sq.m.	CONCRETE VOLUME cu.m.
51	152	79	0.007	0.008	110	0.01	0.008	152	0.02	0.008	210	0.04	0.008	177	0.03	0.008
76	152	119	0.01	0.008	168	0.03	0.008	232	0.05	0.008	317	0.10	0.015	265	0.07	0.015
102	305	158	0.03	0.008	223	0.05	0.02	311	0.10	0.03	424	0.18	0.053	357	0.13	0.038
152	457	235	0.06	0.02	332	0.11	0.05	466	0.22	0.10	634	0.40	0.183	533	0.28	0.130
203	457	314	0.10	0.05	445	0.20	0.09	622	0.39	0.18	844	0.71	0.329	710	0.50	0.229
254	457	393	0.15	0.07	555	0.31	0.14	777	0.60	0.28	1055	1.11	0.512	887	0.79	0.359
305	457	472	0.22	0.10	664	0.44	0.20	933	0.87	0.40	1265	1.60	0.734	1064	1.13	0.520
356	610	552	0.30	0.18	777	0.60	0.37	1088	1.08	0.72	1478	2.19	1.33	1244	1.54	0.940
406	610	628	0.40	0.24	887	0.79	0.48	1244	1.54	0.94	1689	2.85	1.74	1420	2.01	1.23

MINIMUM HORIZONTAL THRUST BLOCKING REQUIREMENTS

PIPE SIZE mm	11.25 DEGREE BEND			22.5 DEGREE BEND			45 DEGREE BEND			90 DEGREE BEND		
	ANCHOR STRAPS		CONCRETE VOLUME cu.m.	ANCHOR STRAPS		CONCRETE VOLUME cu.m.	ANCHOR STRAPS		CONCRETE VOLUME cu.m.	ANCHOR STRAPS		CONCRETE VOLUME cu.m.
	NO.	SIZE		NO.	SIZE		NO.	SIZE		NO.	SIZE	
51	1	4	0.031	1	4	0.061	1	4	0.122	1	4	0.229
76	1	4	0.069	1	4	0.138	1	4	0.275	1	4	0.512
102	1	4	0.122	1	4	0.252	1	4	0.489	1	4	0.910
152	1	4	0.282	1	4	0.566	1	4	1.101	1	4	2.041
203	1	4	0.505	1	4	1.002	1	4	1.965	2	4	3.624
254	1	4	0.787	1	4	1.560	2	4	3.066	2	4	5.658
305	1	4	1.13	1	4	2.248	2	4	4.411	2	5	8.143
356	1	4	1.54	2	4	3.066	2	4	6.009	2	6	11.101
406	1	4	2.01	2	4	3.999	2	5	7.844	3	5	14.488

MINIMUM VERTICAL THRUST BLOCKING REQUIREMENTS

NOTES:

1. BEARING AREA FOR HORIZONTAL THRUST BLOCKING IS BASED ON 1034.214 KPa STATIC PRESSURE PLUS 827.3709 KPa WATER HAMMER PRESSURE AND 119.7006 KPa SOIL BEARING VALUE.

2. CONCRETE VOLUME FOR VERTICAL THRUST BLOCKING IS BASED ON 1034.214 KPa STATIC PRESSURE PLUS 827.3709 KPa WATER HAMMER PRESSURE AND 2402.77 Kg/M OF CONCRETE.

3. ALL CONCRETE IS 14478.99 KPa.

4. USE POLYETHYLENE WRAP OR EQUAL BETWEEN CONCRETE AND BEND.

5. ALL BLOCKING TO BE AGAINST UNDISTURBED HAND DUG SOIL.

6. DIMENSIONS MAY BE VARIED AS REQUIRED BY FIELD CONDITIONS WHERE AND AS DIRECTED BY ENGINEER. THE VOLUME OF CONCRETE BLOCKING SHALL NOT BE LESS THAN SHOWN HERE.

7. ALL VALVES SHALL BE A MINIMUM OF 1.524 M FROM BLOCKED FITTINGS.

8. DO NOT COVER JOINTS OF FITTING WITH CONCRETE.

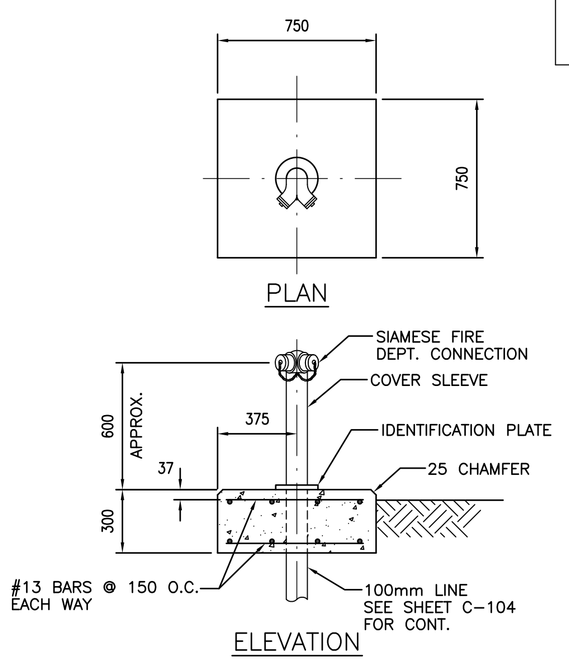

NOTE: INSTALL PER MANUFACTURER'S RECOMMENDATIONS.

2 YARD FIRE DEPARTMENT CONNECTION
N.T.S.

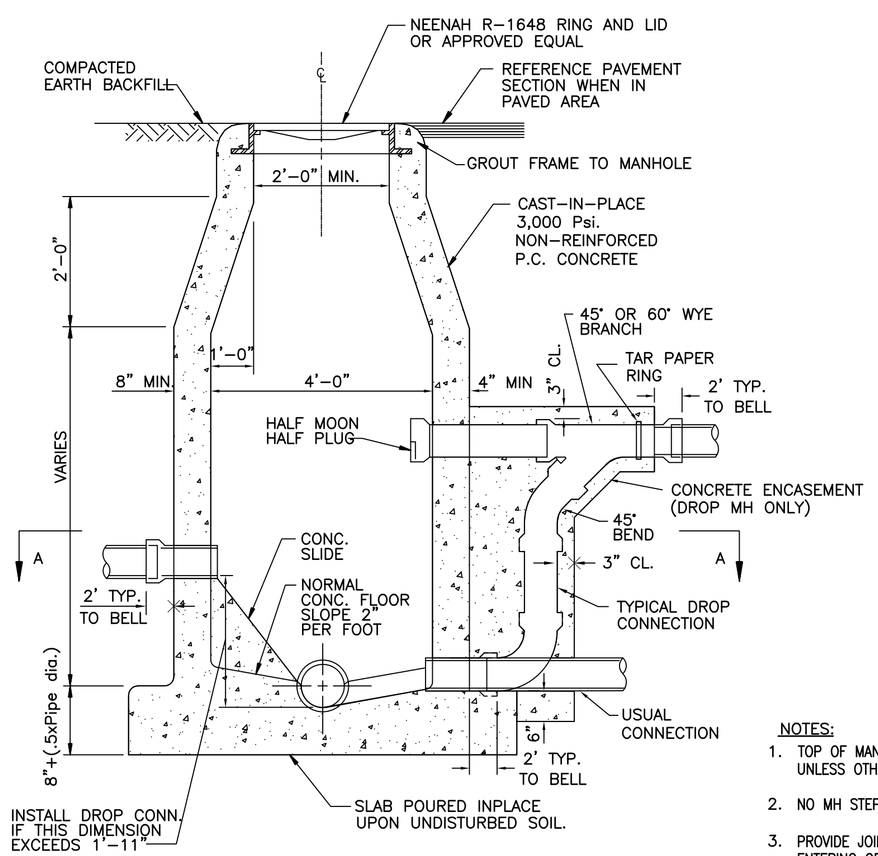

SECTION THRU CENTER

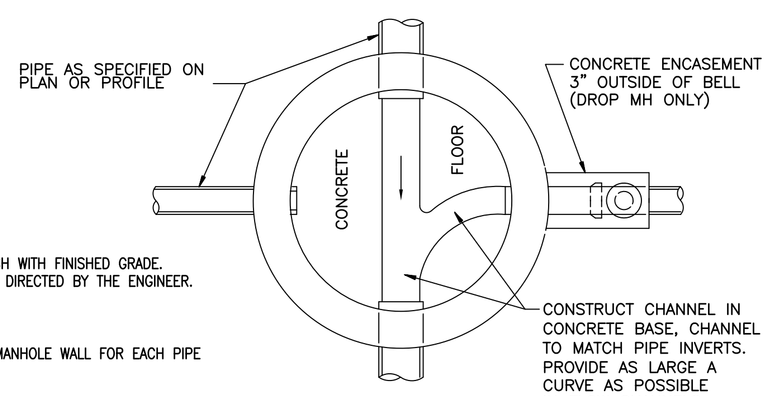

SECTION A-A

NOTES:

1. TOP OF MANHOLE TO BE FLUSH WITH FINISHED GRADE. UNLESS OTHERWISE NOTED OR DIRECTED BY THE ENGINEER.

2. NO MH STEPS REQUIRED.

3. PROVIDE JOINT WITHIN 2' OF MANHOLE WALL FOR EACH PIPE ENTERING OR LEAVING MH.

4. EXTEND CONCRETE BASE TO LIMITS OF EXCAVATION IN ALL DIRECTIONS. (2'-0" MINIMUM)

4 CAST-IN-PLACE CONCRETE SANITARY SEWER MANHOLE
N.T.S.

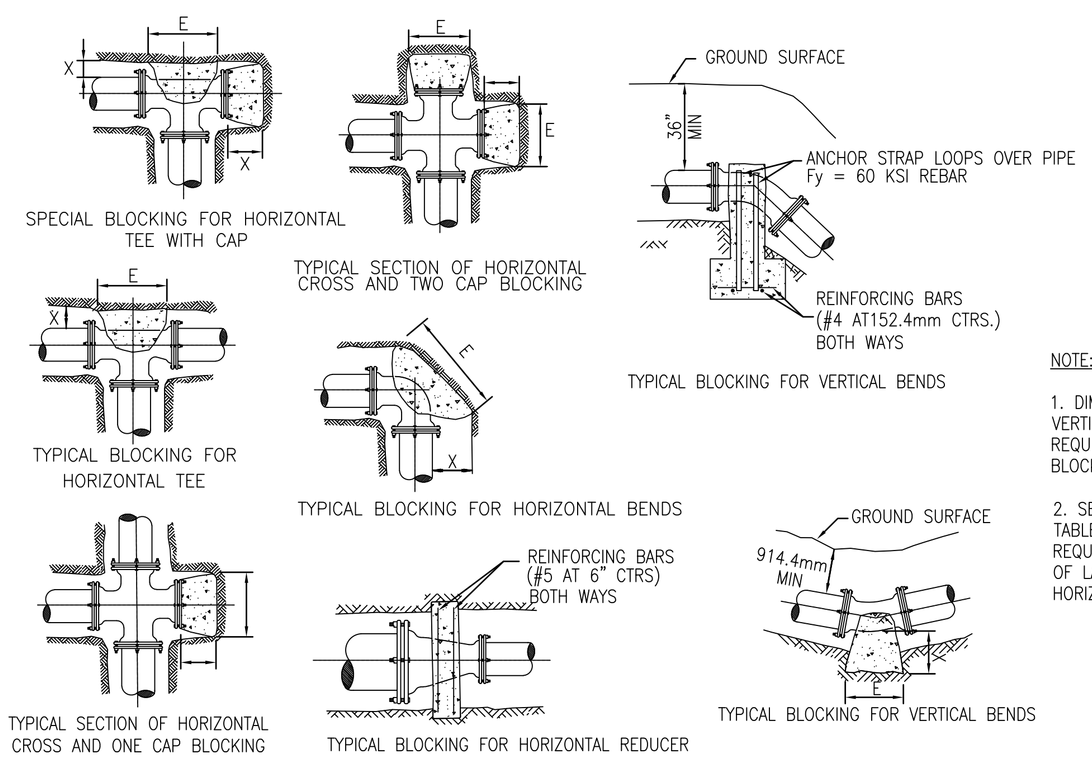

NOTE:

1. DIMENSIONS FOR BLOCKING ON VERTICAL BENDS ARE THE SAME AS REQUIRED FOR HORIZONTAL BLOCKING.

2. SEE VERTICAL BLOCKING TABLES AND USE VOLUME REQUIRED FOR 45 DEGREE BEND OF LARGER DIAMETER PIPE FOR HORIZONTAL REDUCER.

3 TYPICAL HORIZONTAL AND VERTICAL THRUST BLOCKING DETAILS
N.T.S.

U.S. ARMY CORPS OF ENGINEERS
LITTLE ROCK DISTRICT

Mark	Description	Date	Appr.	Mark	Description	Date	Appr.

Designed by:
Reviewed by:
Drawn by:
Dwg. Code:
Contract Date:
File Name: 03003X-000
Plot date: 02/26/03
Plot scale: 1:1
Submitted by: Atkins Benham, Inc.
Initiation No.: DACA03-03-B-0031
Contract No.: DACA03-03-B-

DEPARTMENT OF THE ARMY
U.S. ARMY CORPS OF ENGINEERS
LITTLE ROCK DISTRICT
LITTLE ROCK, ARKANSAS

Atkins Benham
(918) 492-1500 www.atkinsbenham.com
A member of the WS Atkins group of companies
WS Atkins

ADAL C-130J AIRCREW FUSELAGE TRAINER
LRAFB, LITTLE ROCK AR.
Project No. NKAK 043005

DETAILS

Sheet Reference Number:
C-402
Sheet 13 of 91

Drawing: P:\USTAH\FAC\2403151001\20_CAD\C\151001C-402 Saved: 11/26/2002 08:1 By: mb DimScale: 1 (TM=0)
XRefs: 151001G-BS001.DWG