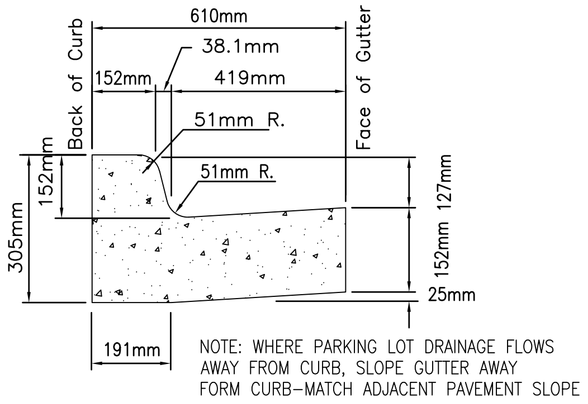

1 STANDARD CURB & GUTTER
NTS

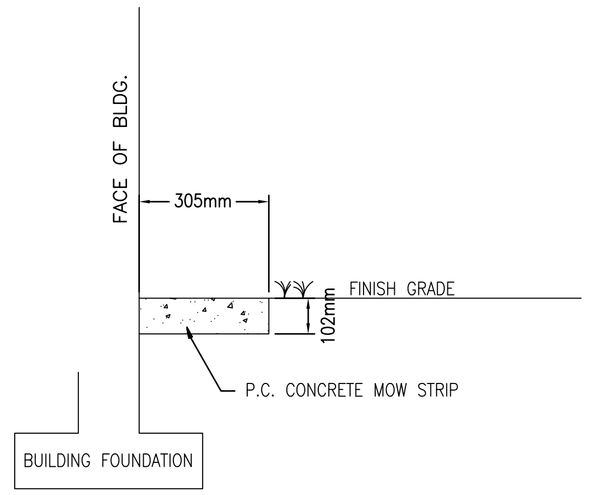

2 MOW STRIP DETAIL
N.T.S.

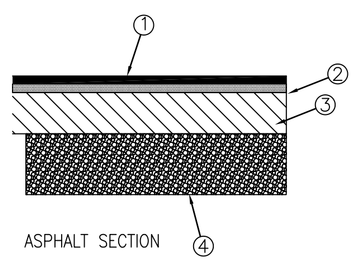

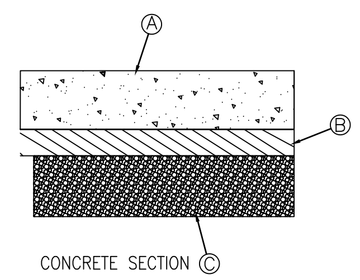

① 76MM ASPHALTIC CONCRETE HOT MIX SURFACE COURSE. MATERIALS SHALL BE IN ACCORDANCE WITH ARKANSAS STATE HIGHWAY DEPT. SPECIFICATIONS.

② 0.32L/S.M. EMULSIFIED ASPHALT OR 0.22L/S.M. PRIME COAT.

③ 203MM LAYER OF CLASS 7 AGGREGATE BASE COURSE. MATERIALS SHALL BE IN ACCORDANCE WITH ARKANSAS STATE HIGHWAY DEPT. SPECIFICATIONS. COMPACTION TO 95% MOD. PROCTOR DENSITY.

④ TOP 305MM OF SUBGRADE IS TO BE COMPACTED TO 95% MOD. PROCTOR DENSITY AS DETERMINED BY ASTM D698 COMPACTION TEST.

Ⓐ 203MM PORTLAND CEMENT CONCRETE SURFACE COURSE. MATERIALS SHALL BE IN ACCORDANCE WITH ARKANSAS STATE HIGHWAY DEPT. SPECIFICATIONS.

Ⓑ 153MM LAYER OF CLASS 7 AGGREGATE BASE COURSE. MATERIALS SHALL BE IN ACCORDANCE WITH ARKANSAS STATE HIGHWAY DEPT. SPECIFICATIONS. COMPACTION TO 95% MOD. PROCTOR DENSITY.

Ⓒ TOP 305MM OF SUBGRADE IS TO BE COMPACTED TO 95% MOD. PROCTOR DENSITY AS DETERMINED BY ASTM D698 COMPACTION TEST.

3 PAVEMENT SECTION DETAILS
NTS

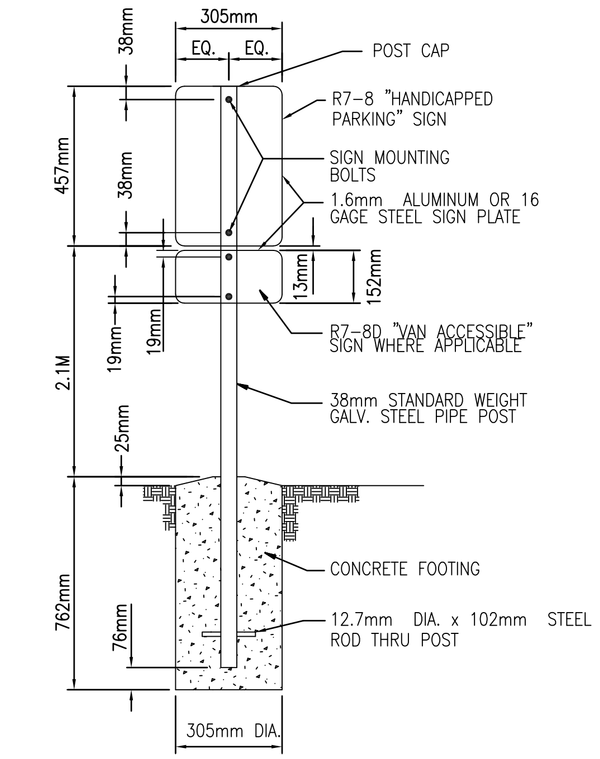

4 ACCESSIBLE PARKING SIGN ASSEMBLY
N.T.S.

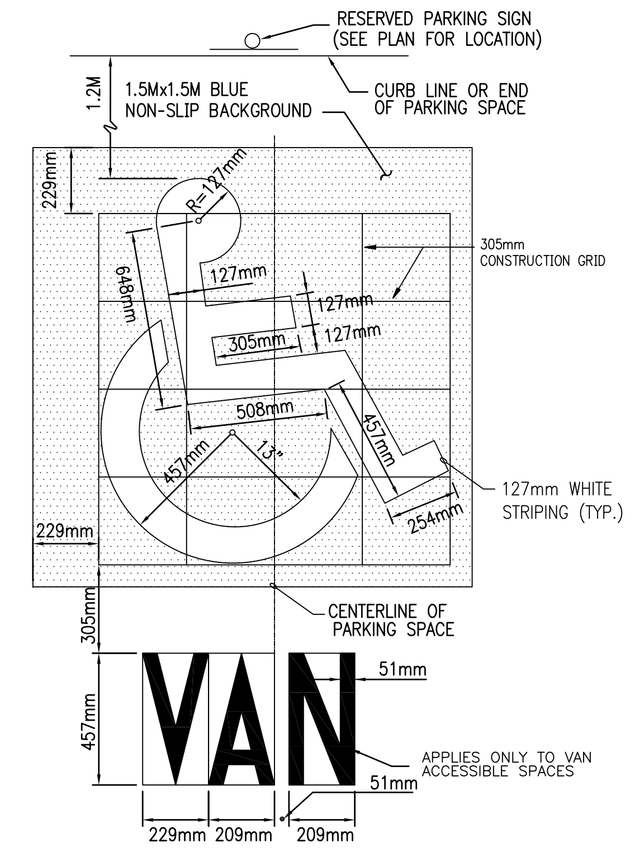

5 ACCESSIBLE PARKING SYMBOL
N.T.S.

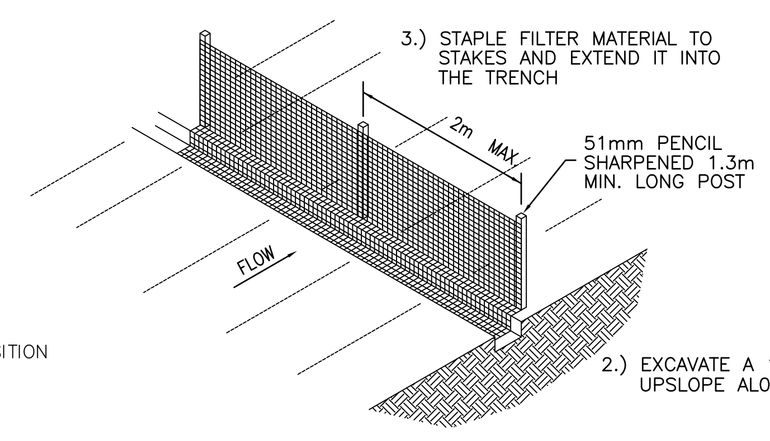

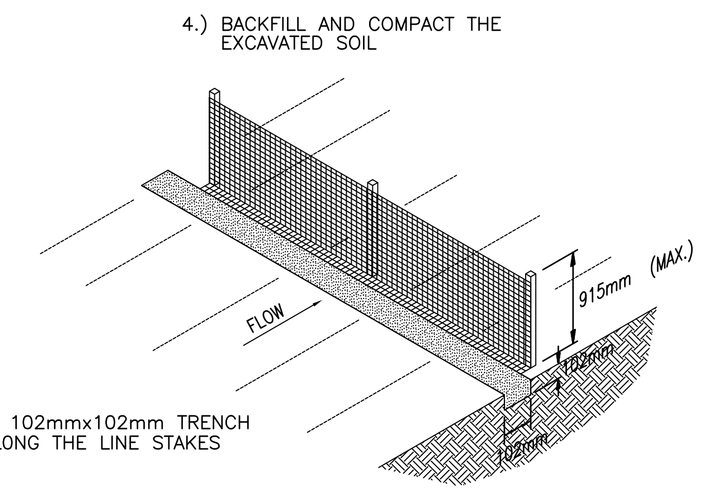

SILT FENCE NOTES

1. THE FILTER FABRIC SHALL BE PURCHASED IN A CONTINUOUS ROLL CUT TO THE LENGTH OF THE BARRIER TO AVOID THE USE OF JOINTS. WHEN JOINTS ARE NECESSARY FILTER CLOTH SHALL BE SPLICED TOGETHER ONLY AT A SUPPORT POST WITH A MINIMUM 152mm OVERLAP AND SECURELY SEALED.

2. POSTS SHALL BE SPACED A MAXIMUM OF 1.83m APART AT THE BARRIER LOCATION AND DRIVEN SECURELY INTO THE GROUND (MINIMUM OF 457mm.)

3. A TRENCH SHALL BE EXCAVATED APPROXIMATELY 102mm WIDE AND 102mm DEEP ALONG THE LINE OF POSTS AND UPSLOPE FROM THE BARRIER.

4. THE FABRIC SHALL BE STAPLED OR WIRED TO THE FENCE AND 203mm OF THE FABRIC SHALL BE EXTENDED INTO THE TRENCH. THE FABRIC SHALL NOT EXTEND MORE THAN 914mm ABOVE THE ORIGINAL GROUND SURFACE. THE TRENCH SHALL BE BACKFILLED AND SOIL COMPACTED OVER THE FILTER FABRIC.

5. FILTER FABRIC SHALL NOT BE STAPLED TO EXISTING TREES!

6. IT MAY BECOME NECESSARY TO REMOVE PORTIONS OF THE SEDIMENT FENCE DURING CONSTRUCTION TO FACILITATE THE GRADING OPERATIONS IN CERTAIN AREAS. HOWEVER, THE SEDIMENT FENCE SHALL BE IN PLACE IN THE EVENING OR DURING ANY INCLEMENT WEATHER.

7 SILT FENCE
N.T.S.

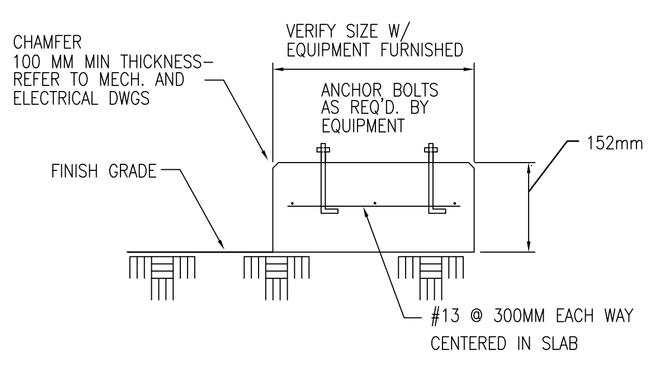

6 MECHANICAL PAD DETAIL
N.T.S.

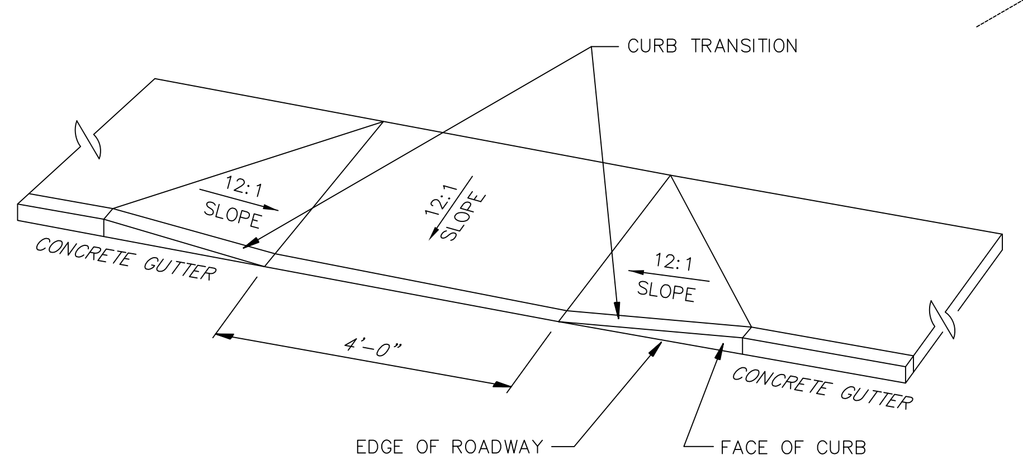

8 ACCESSIBLE RAMP
N.T.S.

U.S. ARMY CORPS OF ENGINEERS
LITTLE ROCK DISTRICT

Mark	Description	Date	Appr.	Mark	Description	Date	Appr.

Drawn by: | Contract Date:
Dwg. Code: | File Name: 1930031-000
Pkt date: 02/26/03
Pkt scale: 1:1
Designed by:
Reviewed by:
Submitted by: Atkins Benham, Inc.
Contract No.: DACA03-03-B-
Initiation No.: DACA03-03-A-0021

DEPARTMENT OF THE ARMY
U.S. ARMY CORPS OF ENGINEERS
LITTLE ROCK DISTRICT
LITTLE ROCK, ARKANSAS

Atkins Benham
(918) 492-1500 www.atkinsbenham.com
6 E. 3rd Street, Tulsa, Atkins group of companies
WS ATKINS

ADAL C-130J AIRCREW FUSELAGE TRAINER
LRAFB, LITTLE ROCK AR.
Project No. NKAK 043005

DETAILS

Sheet Reference Number:
C-401
Sheet 12 of 91

Drawing: P:\USTAH\FAC\2403151001\20_CAD\C\151001C-401 Saved: 11/26/2002 08:25 By: mb DimScale: 1 (TM=0)
XRefs: 151001G-BS001.DWG