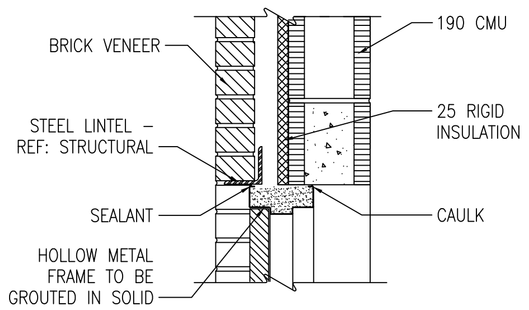

1 HEAD DETAIL
A601 A505 SCALE: 1:10

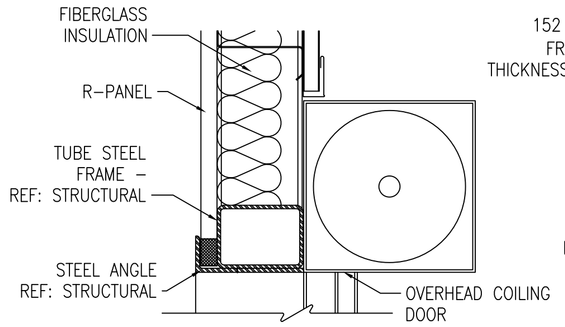

2 OVERHEAD DOOR HEAD
A601 A505 SCALE: 1:10

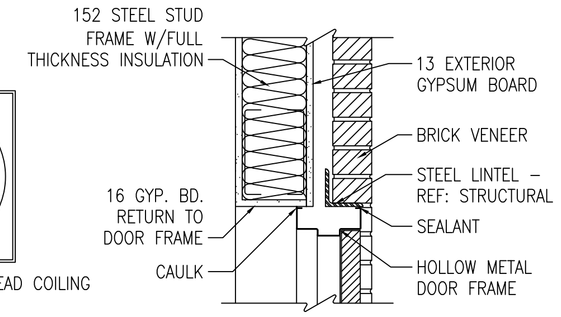

3 HEAD DETAIL
A601 A505 SCALE: 1:10

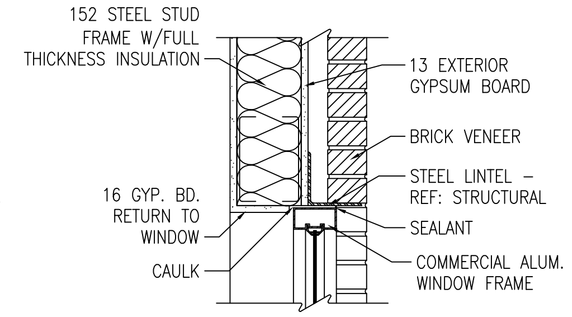

4 HEAD DETAIL
A601 A505 SCALE: 1:10

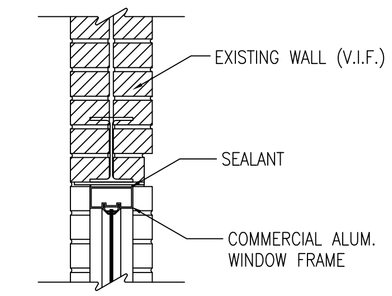

5 HEAD DETAIL
A601 A505 SCALE: 1:10

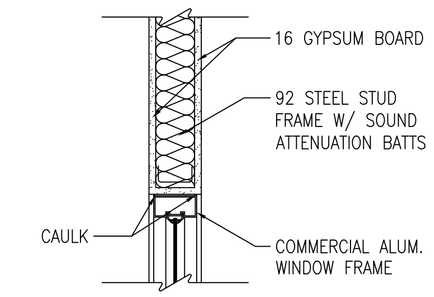

6 HEAD DETAIL
A601 A505 SCALE: 1:10

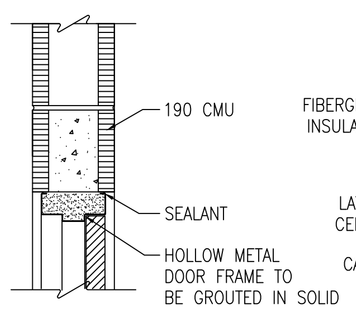

7 HEAD DETAIL
A601 A505 SCALE: 1:10

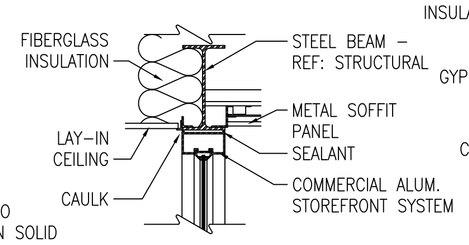

8 HEAD DETAIL
A601 A505 SCALE: 1:10

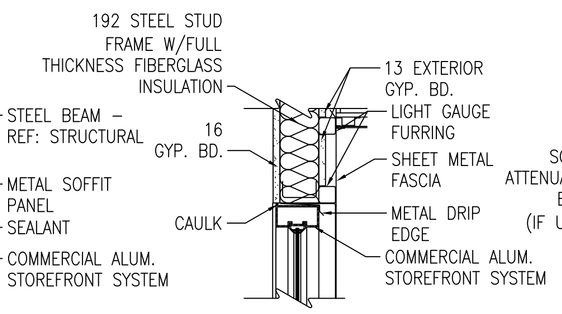

9 HEAD DETAIL
A601 A505 SCALE: 1:10

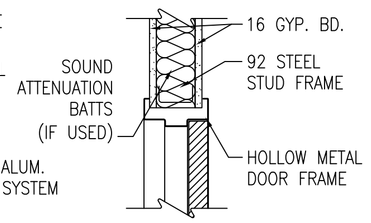

10 HEAD DETAIL
A601 A505 SCALE: 1:10

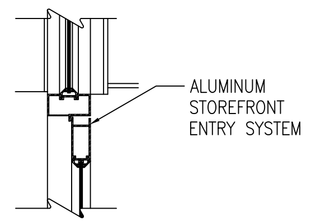

11 ALUM. FRAME HEAD
A601 A505 SCALE: 1:10

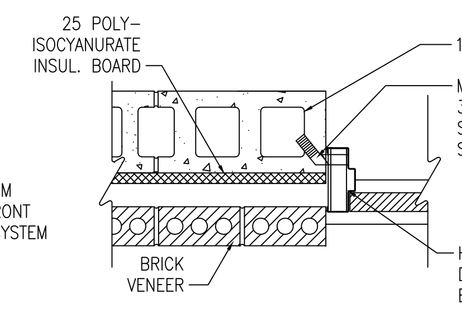

12 JAMB DETAIL
A601 A505 SCALE: 1:10

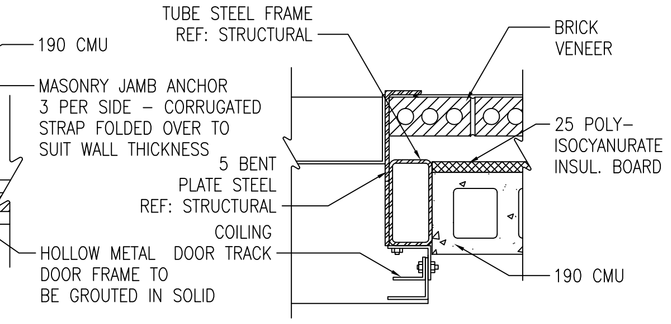

13 OVERHEAD DOOR JAMB @ BRICK
A601 A505 SCALE: 1:10

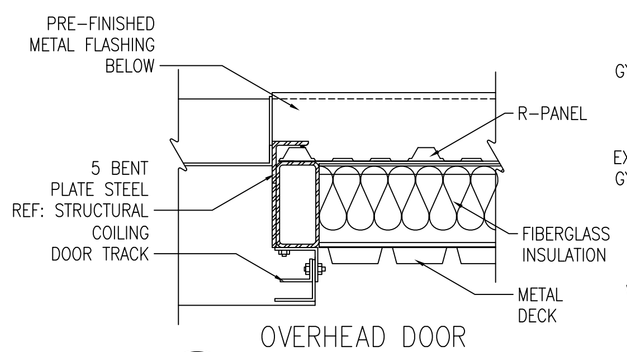

OVERHEAD DOOR JAMB ABOVE BRICK
14 A601 A505 SCALE: 1:10

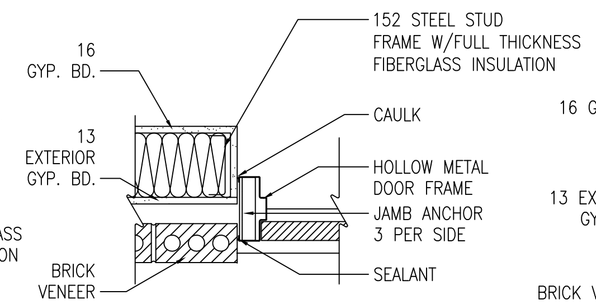

15 JAMB DETAIL
A601 A505 SCALE: 1:10

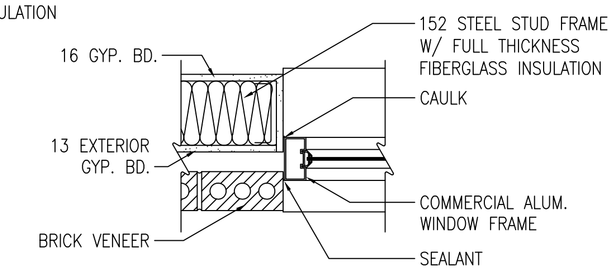

16 JAMB DETAIL
A601 A505 SCALE: 1:10

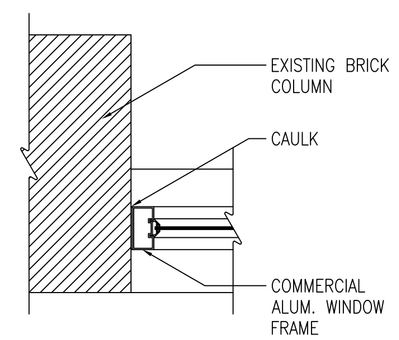

17 JAMB DETAIL
A601 A505 SCALE: 1:10

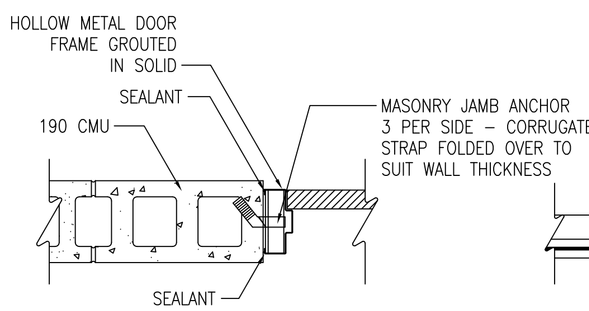

18 JAMB DETAIL
A601 A505 SCALE: 1:10

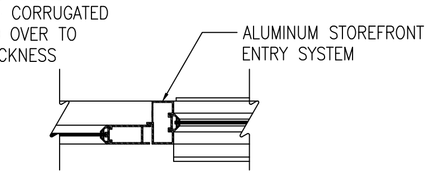

ALUM. FRAME JAMB DETAIL
19 A601 A505 SCALE: 1:10

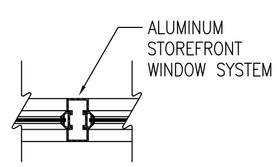

ALUM. FRAME JAMB DETAIL
20 A601 A505 SCALE: 1:10

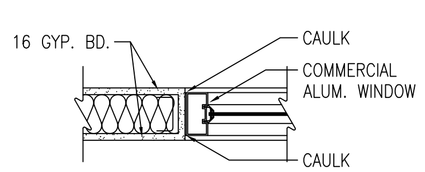

21 JAMB DETAIL
A601 A505 SCALE: 1:10

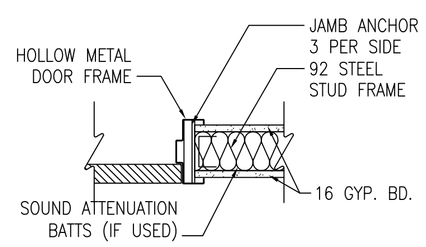

22 JAMB DETAIL
A601 A505 SCALE: 1:10

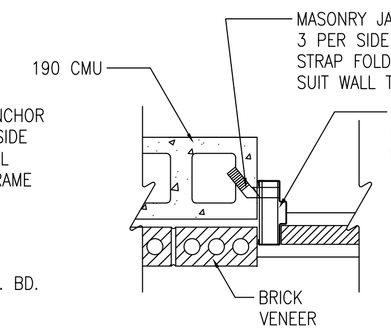

23 JAMB DETAIL
A601 A505 SCALE: 1:10

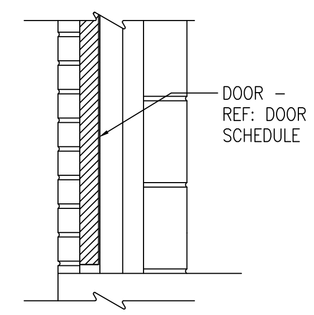

24 THRESHOLD DETAIL
A601 A505 SCALE: 1:10

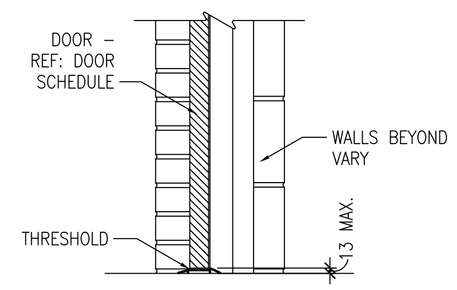

25 THRESHOLD DETAIL
A601 A505 SCALE: 1:10

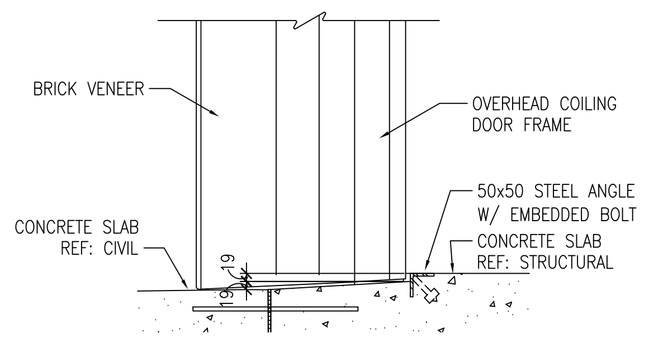

26 OVERHEAD DOOR SILL
A601 A505 SCALE: 1:10

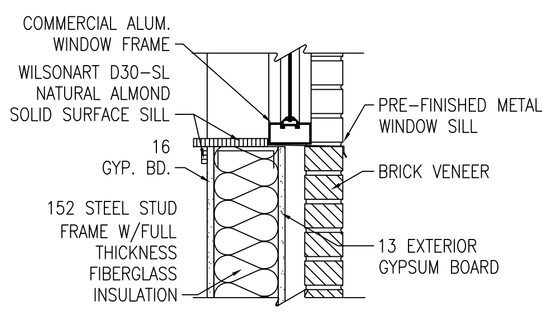

27 SILL DETAIL
A601 A505 SCALE: 1:10

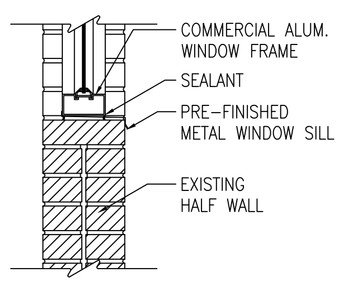

28 SILL DETAIL
A601 A505 SCALE: 1:10

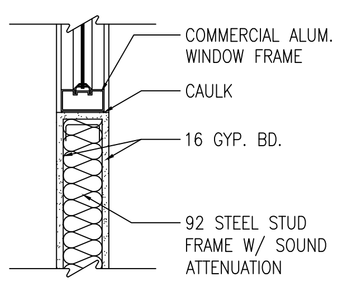

29 SILL DETAIL
A601 A505 SCALE: 1:10

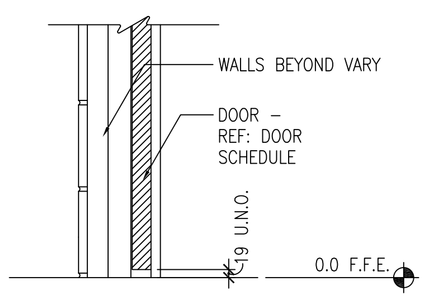

30 SILL DETAIL
A601 A505 SCALE: 1:10

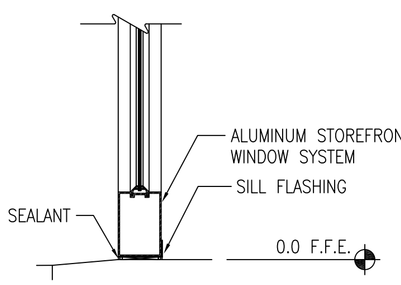

31 SILL DETAIL
A601 A505 SCALE: 1:10

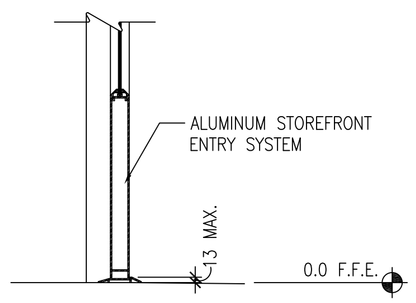

32 THRESHOLD DETAIL
A601 A505 SCALE: 1:10

NOTE:
ALL DIMENSIONS AND/OR DIMENSIONS SHOWN IN CALLOUTS/NOTES ARE IN MILLIMETERS (mm) UNLESS OTHERWISE NOTED.

GRAPHIC SCALE:
0 100 200 400
SCALE: 1: 10

U.S. ARMY CORPS OF ENGINEERS
LITTLE ROCK DISTRICT

Mark	Description	Date	Appr.	Mark	Description	Date	Appr.

Contract Date:
Drawn by: WB3
Drwg. Code:
Designed by: JSR
Reviewed by: DW
File Name: 151001A-505
Plot date: 02/04/03
Plot scale: 1:1
Submitted by:
Atkins Benham, Inc.
Contract No.:
Invitation No.: DACA03-03-B-0021
DACA03-03-B-

DEPARTMENT OF THE ARMY
U.S. ARMY CORPS OF ENGINEERS
LITTLE ROCK DISTRICT
LITTLE ROCK, ARKANSAS

Atkins Benham
(918) 492-1600 www.atkinsbenham.com
A Division of Atkins, Inc. Atkins
group of companies
WS ATKINS

ADAL C–130J AIRCREW FUSELAGE TRAINER
LRAFB, LITTLE ROCK AR.
Project No. NKAK 043005

HEAD, JAMB AND SILL DETAILS

Sheet Reference Number:
A–505
Sheet 35 of 91

Drawing: F:\2402151001 LRAFB C130J FUSELAGE TRAINER\20_CAD\A\151001A-505 Saved: 03/27/2003 17:05 By: tbg DimScale: 1.00 (TM=0)
XRefs: 151001G-BS001.DWG 151001A-DT02.DWG