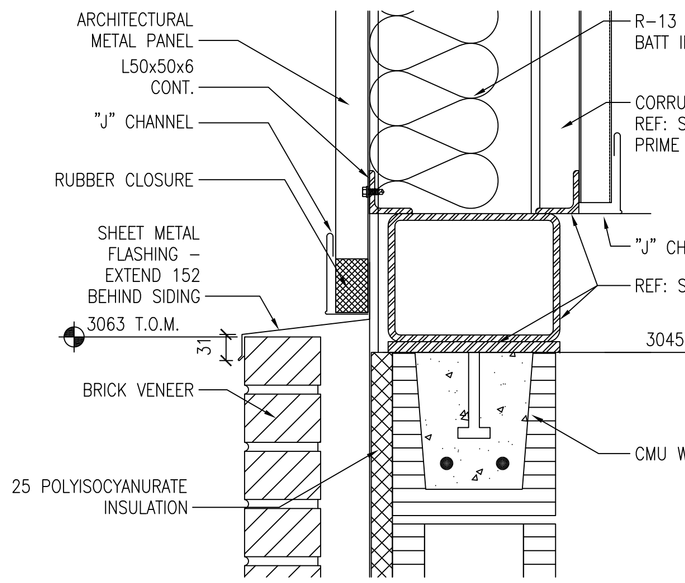

1 SECTION DETAIL
A303 A504 SCALE: 1:5

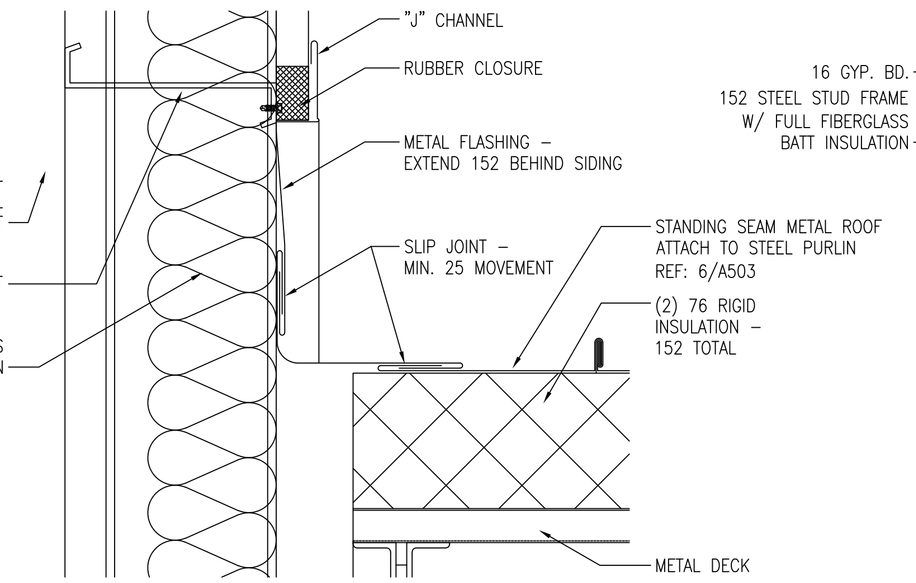

2 SECTION DETAIL
A303 A504 SCALE: 1:5

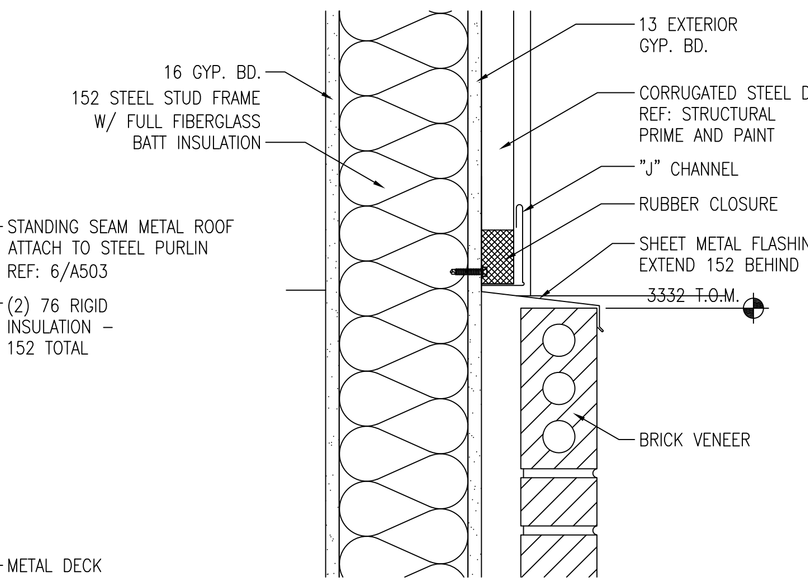

3 SECTION DETAIL
A303 A504 SCALE: 1:5

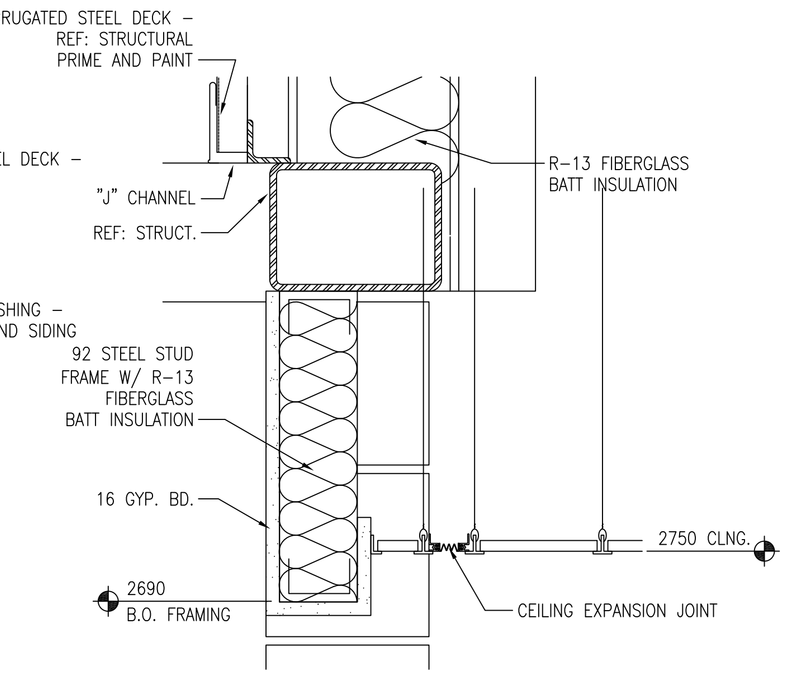

4 SECTION DETAIL
A303 A504 SCALE: 1:5

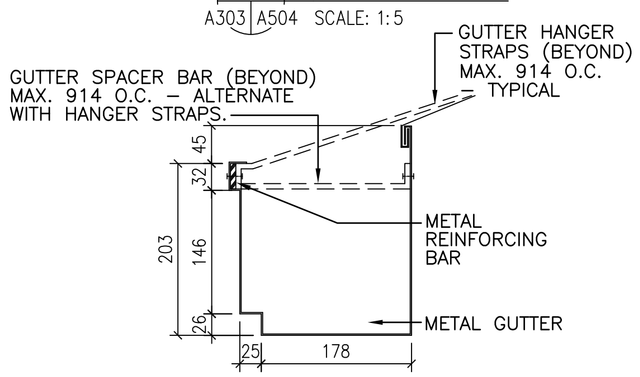

SECTION A–A

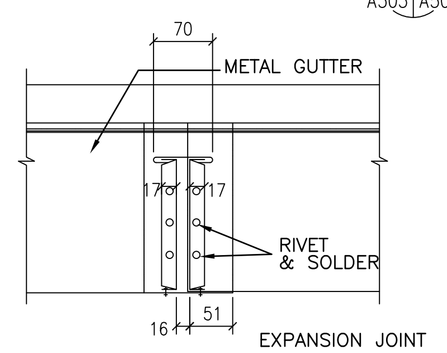

SECTION B–B

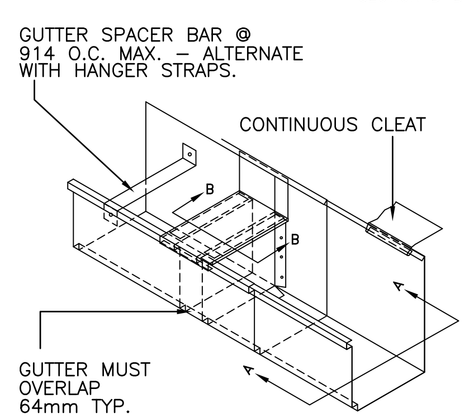

ISOMETRIC

5 GUTTER DETAIL
A503 A504 SCALE: 1:5

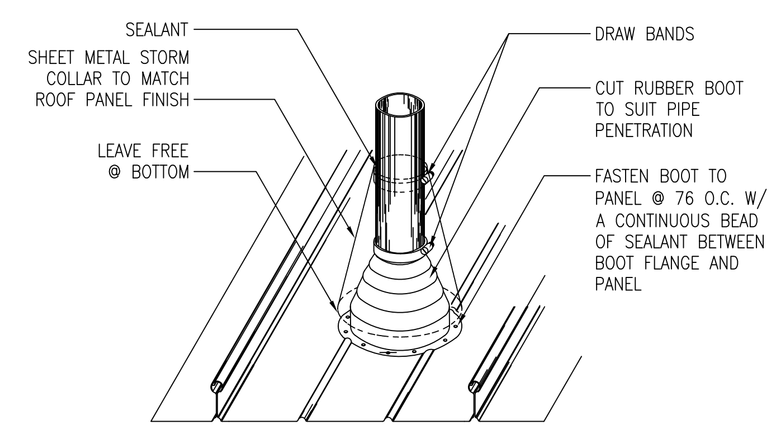

NOTE: THIS DETAIL IS SUITABLE FOR DIAMETERS UP TO 250.

6 ROOF PENETRATION
A503 A504 SCALE: N.T.S.

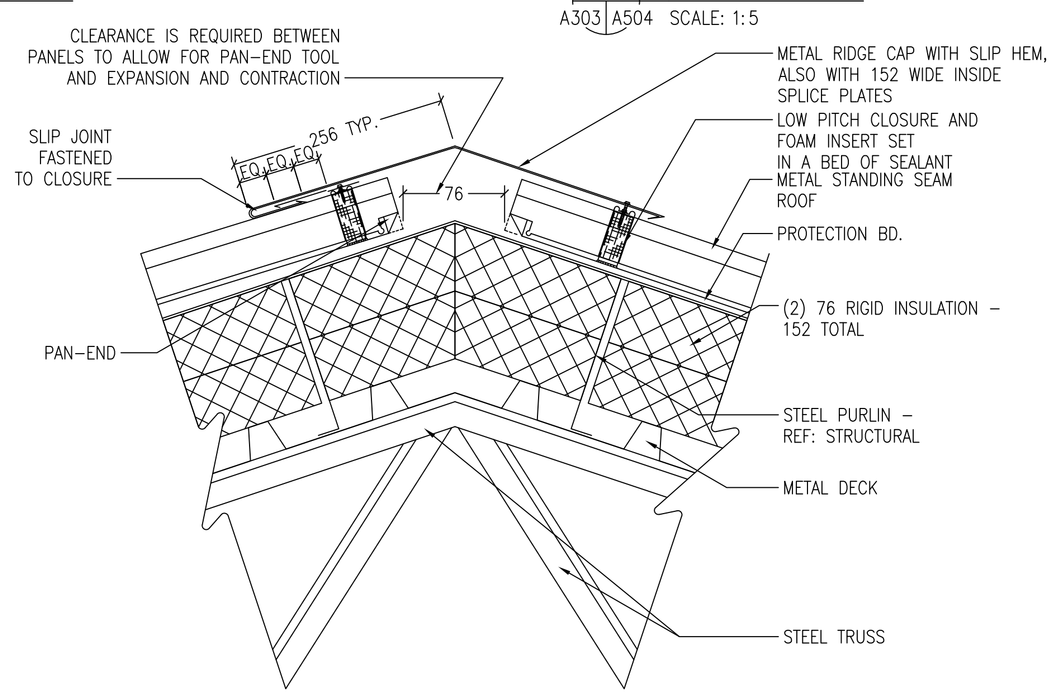

7 RIDGE DETAIL
A504 A504 SCALE: 1:5

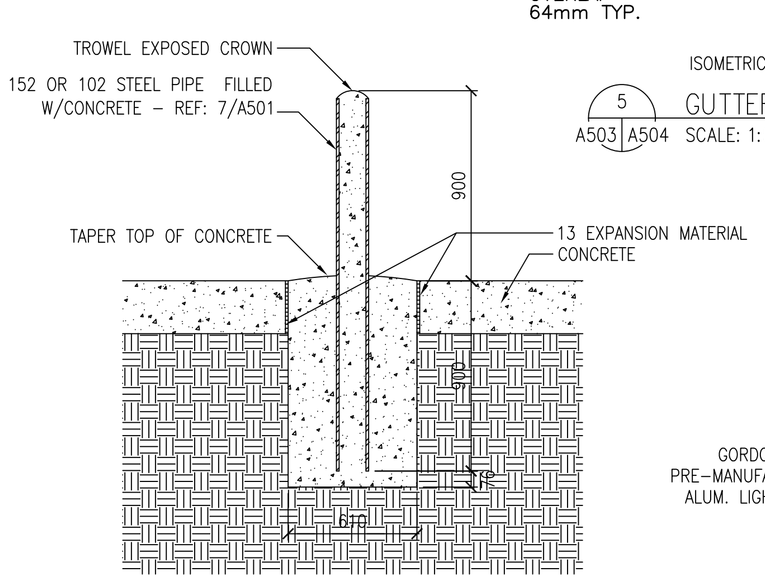

8 BOLLARD DETAIL
A201 A202 A501 A504 SCALE: 1:20

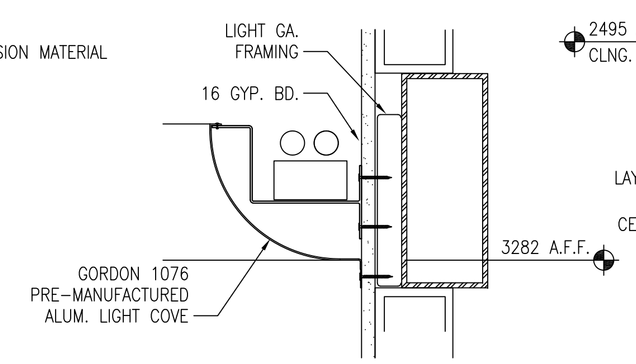

9 LIGHT COVE DETAIL
A503 A504 SCALE: 1:5

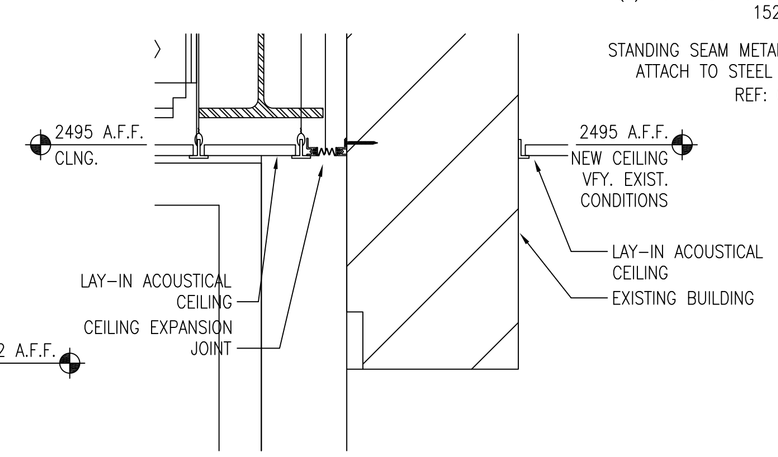

10 CEILING EXPANSION JOINT DETAIL
A503 A504 SCALE: 1:5

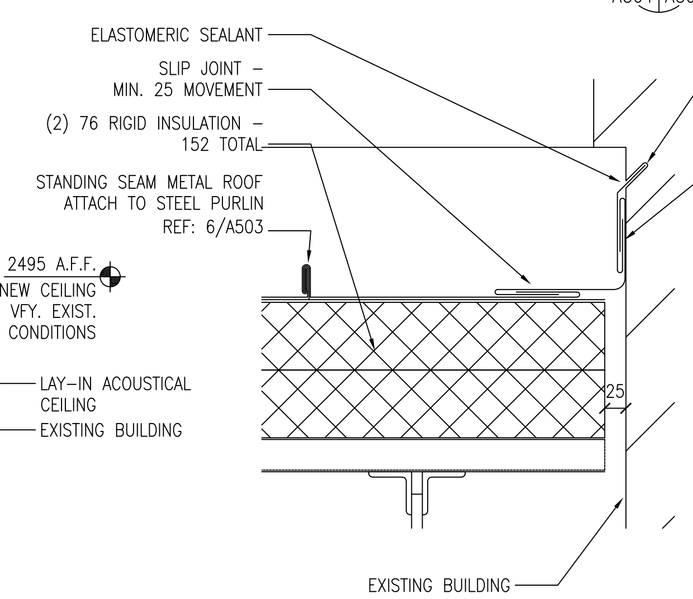

11 ROOF FLASHING DETAIL
A503 A504 SCALE: 1:5

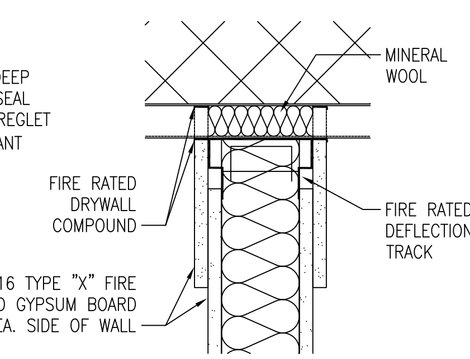

12 TRACK DETAIL
A303 A504 SCALE: 1:5

NOTE:
ALL DIMENSIONS AND/OR DIMENSIONS SHOWN IN CALLOUTS/NOTES ARE IN MILLIMETERS (mm) UNLESS OTHERWISE NOTED.

GRAPHIC SCALE:

0 50 100 200
SCALE: 1:5

0 200 400 800
SCALE: 1:20

U.S. ARMY CORPS OF ENGINEERS
LITTLE ROCK DISTRICT

Mark	Description	Date	Appr.	Mark	Description	Date	Appr.

Designed by: JES
Drawn by: JWT
Contract Date:
Reviewed by: TW
Dwg. Code:
File Name: 151001A-504
Plot date: 02/26/03
Plot scale: 1:1
Submitted by:
Atkins Benham, Inc.
Initiation No.: DACA03-03-R-0031
Contract No.: DACA03-03-B-

DEPARTMENT OF THE ARMY
U.S. ARMY CORPS OF ENGINEERS
LITTLE ROCK DISTRICT
LITTLE ROCK, ARKANSAS

Atkins Benham
(918) 492-1500 www.atkinsbenham.com
a member of the WS Atkins group of companies
WS Atkins

ADAL C-130J AIRCREW FUSELAGE TRAINER
LRAFB, LITTLE ROCK AR.
Project No. NKAK 043005

SECTION DETAILS

Sheet Reference Number:
A-504
Sheet 34 of 91

Drawing: F:\2402151001 LRAFB C130J FUSELAGE TRAINER\20_CAD\A\151001A-504 Saved: 03/27/2003 17:08 By: tbg DimScale: 1.00 (TM=0)
XRefs: 151001G-BS001.DWG 151001A-SC01.DWG 151001A-DT03.DWG