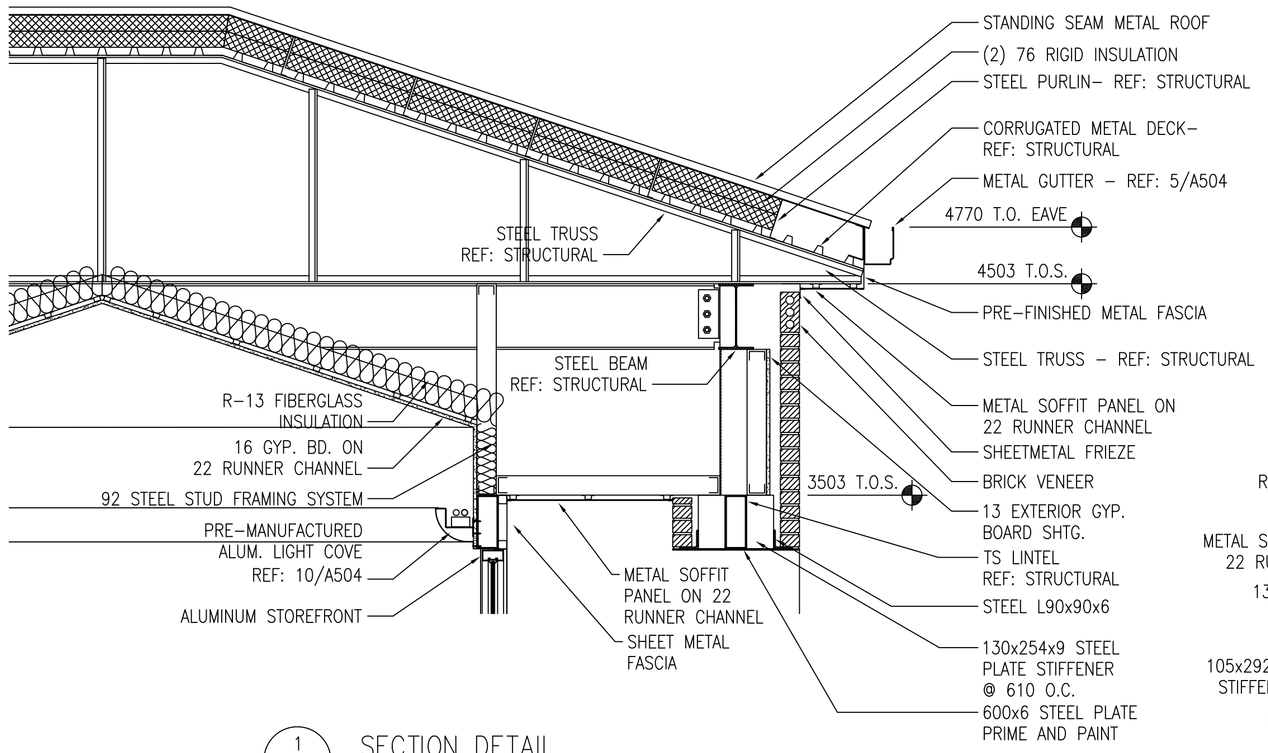

1 SECTION DETAIL
A302 A503 SCALE: 1:20

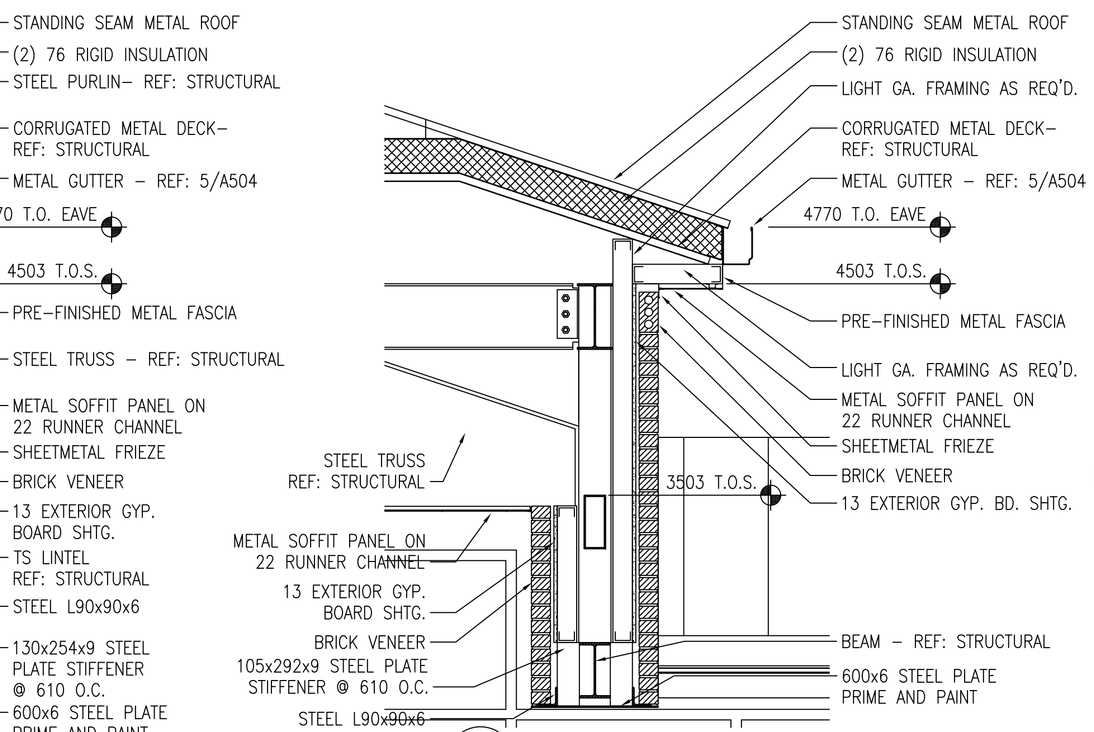

2 SECTION DETAIL
A302 A503 SCALE: 1:20

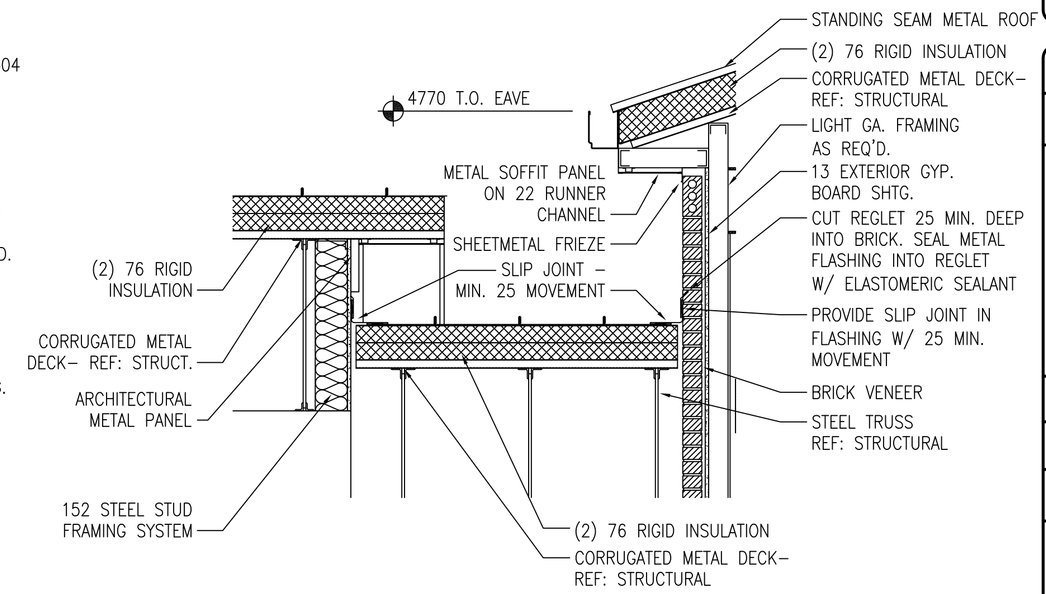

3 SECTION DETAIL
A302 A503 SCALE: 1:20

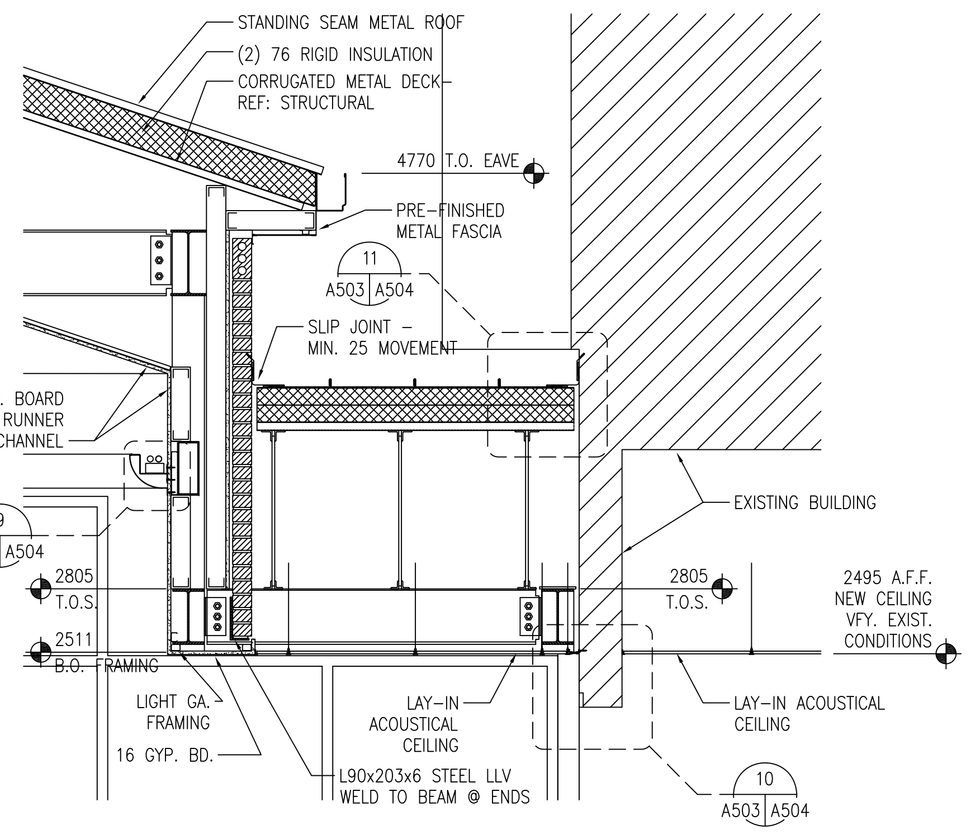

4 SECTION DETAIL
A302 A503 SCALE: 1:20

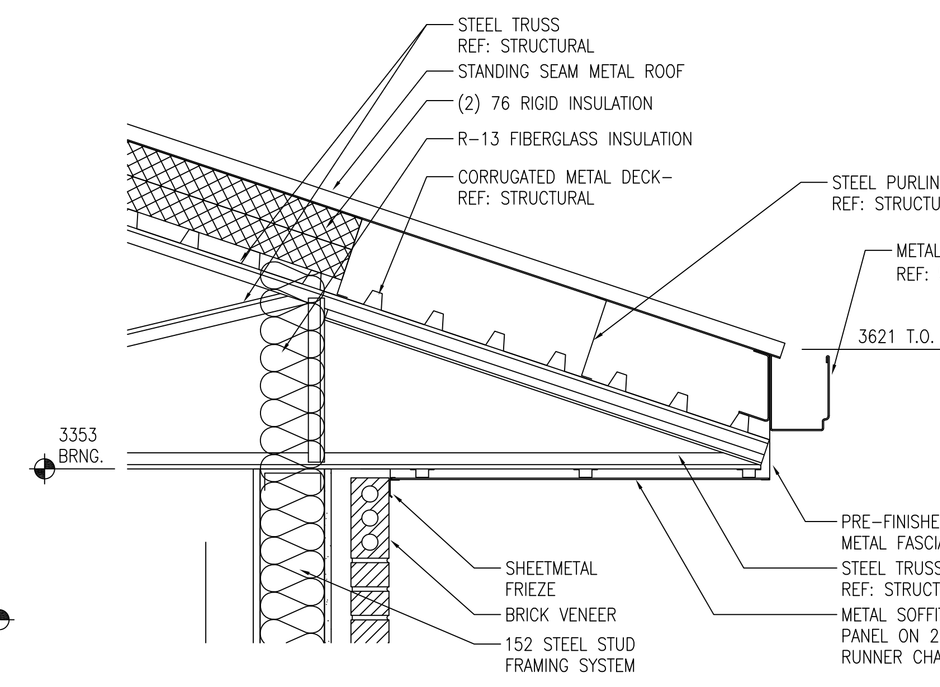

5 SECTION DETAIL
A304 A503 SCALE: 1:10

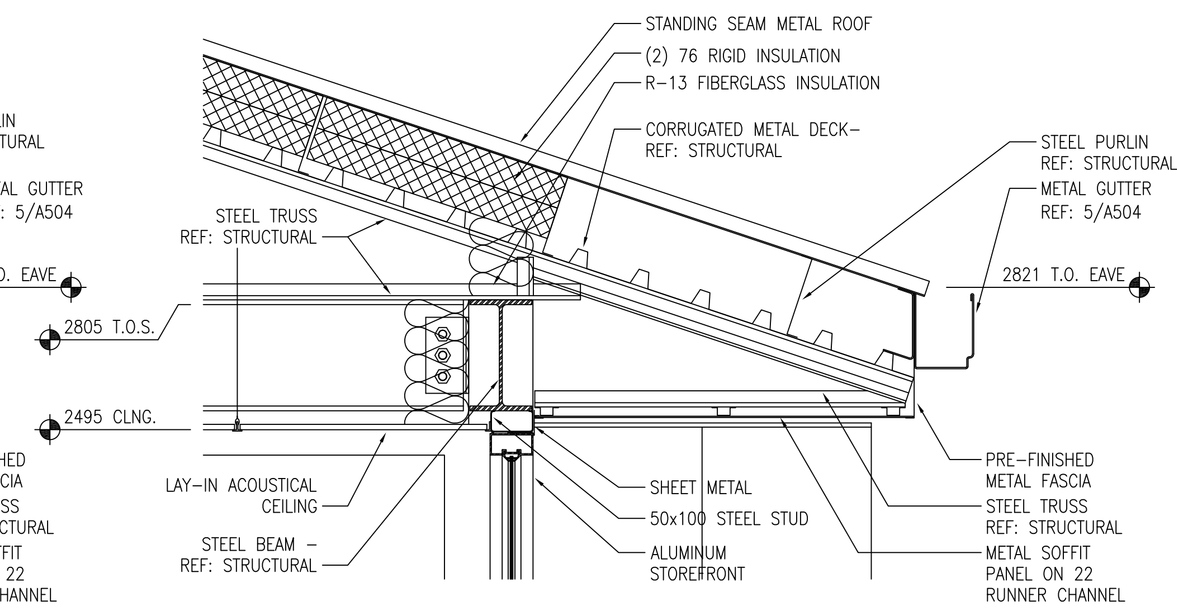

6 SECTION DETAIL
A304 A503 SCALE: 1:10

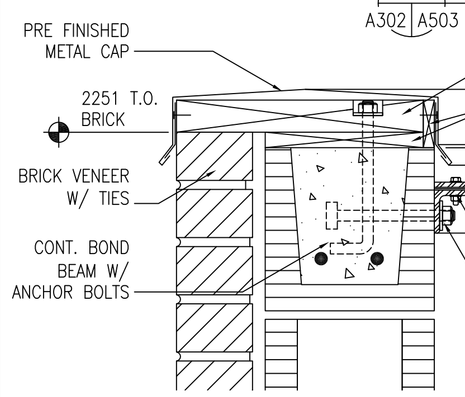

7 SECTION DETAIL
A303 A503 SCALE: 1:5

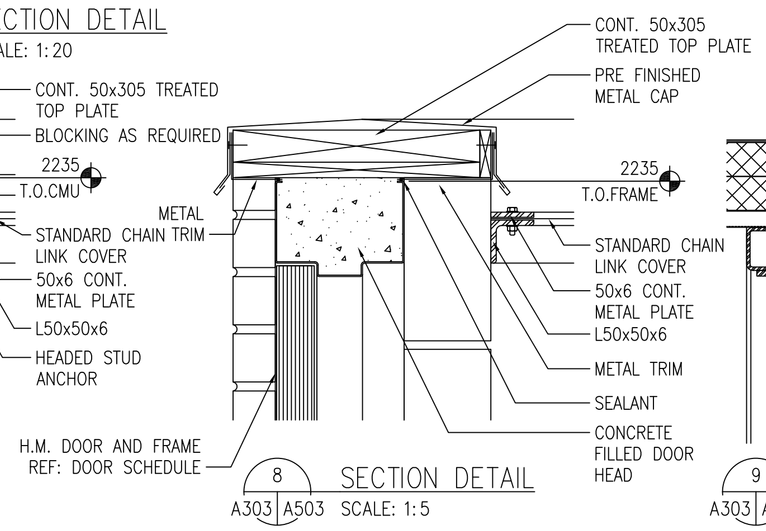

8 SECTION DETAIL
A303 A503 SCALE: 1:5

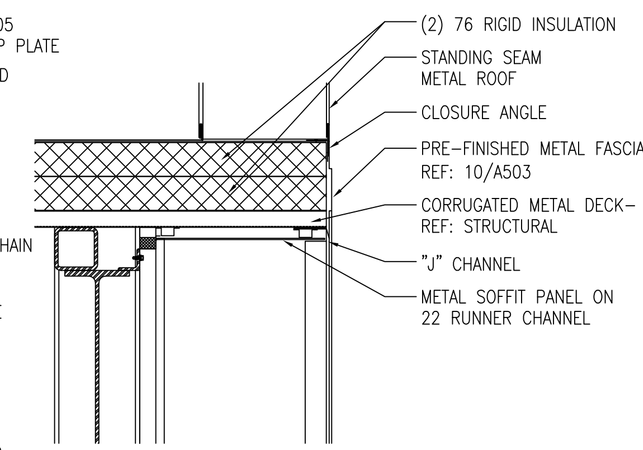

9 SECTION DETAIL
A303 A503 SCALE: 1:10

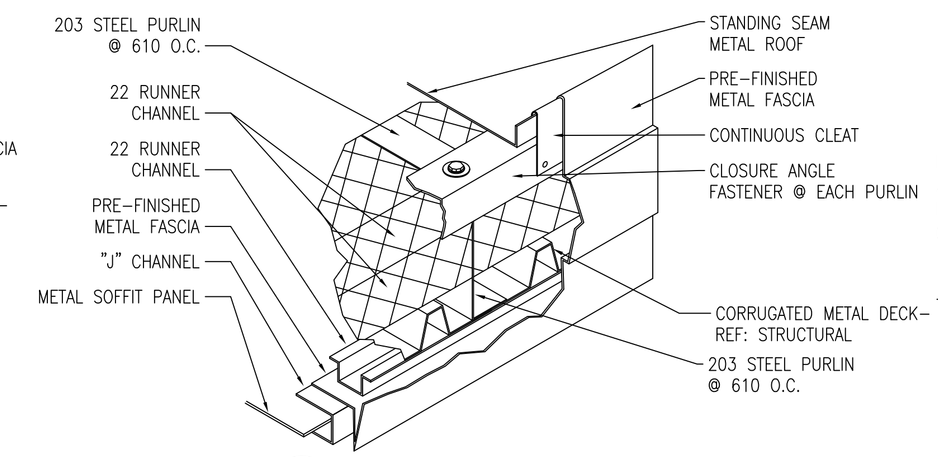

10 FASCIA DETAIL
A503 A503 SCALE: 1:5

NOTE:
ALL DIMENSIONS AND/OR DIMENSIONS SHOWN IN CALLOUTS/NOTES ARE IN MILLIMETERS (mm) UNLESS OTHERWISE NOTED.

GRAPHIC SCALE:

0 50 100 200
SCALE: 1: 5

0 100 200 400
SCALE: 1: 10

0 200 400 800
SCALE: 1: 20

U.S. ARMY CORPS OF ENGINEERS
LITTLE ROCK DISTRICT

Mark	Description	Date	Appr.	Mark	Description	Date	Appr.

Contract Date:
File Name: 151001A–502
Plot date: 02/04/03
Plot scale: 1:1
Contract No.: DACA03–03–B–
Drawn by: JET
Drwg. Code:
Designed by: JSB
Reviewed by: DW
Submitted by:
Atkins Benham, Inc.
Initiation No.: DACA03–03–A–0021

DEPARTMENT OF THE ARMY
U.S. ARMY CORPS OF ENGINEERS
LITTLE ROCK DISTRICT
LITTLE ROCK, ARKANSAS

Atkins Benham
(918) 492–1500 www.atkinsbenham.com
a wholly owned subsidiary of Atkins group of companies
WS ATKINS

ADAL C–130J AIRCREW FUSELAGE TRAINER
LRAFB, LITTLE ROCK AR.
Project No. NKAK 043005

SECTION DETAILS

Sheet Reference Number:
A–503
Sheet 33 of 91

Drawing: F:\240215100 1 LRAFB C130J FUSELAGE TRAINER\20_CAD\A\151001A–503 Saved: 03/27/2003 17:10 By: tbg DimScale: 1.00 (TM=0)
XRefs: 151001G–BS001.DWG 151001A–SC01.DWG 151001A–DT06.DWG