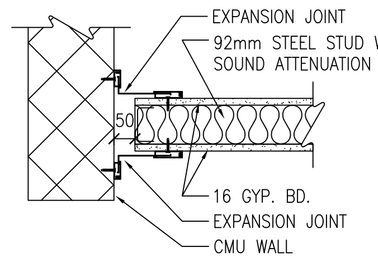

1 EXPANSION JOINT DETAIL
A101 A502 SCALE: 1:10

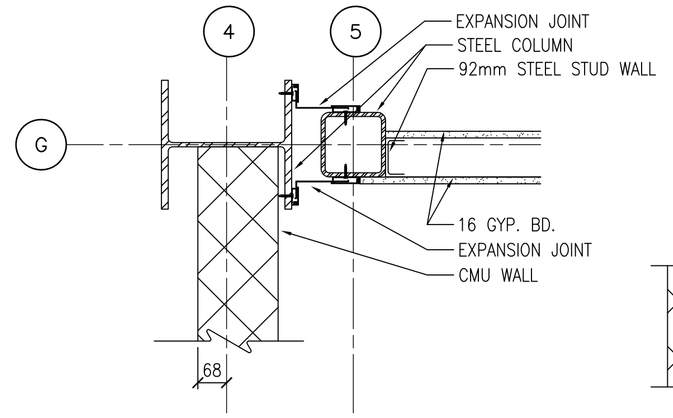

2 COLUMN DETAIL
A101 A502 SCALE: 1:10

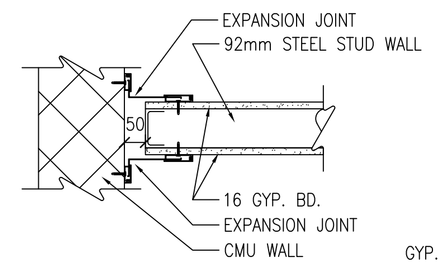

3 EXPANSION JOINT DETAIL
A101 A502 SCALE: 1:10

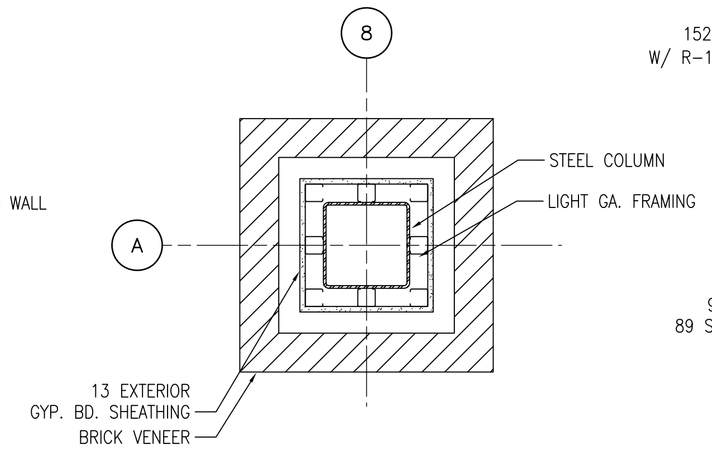

4 COLUMN DETAIL
A101 A502 SCALE: 1:10

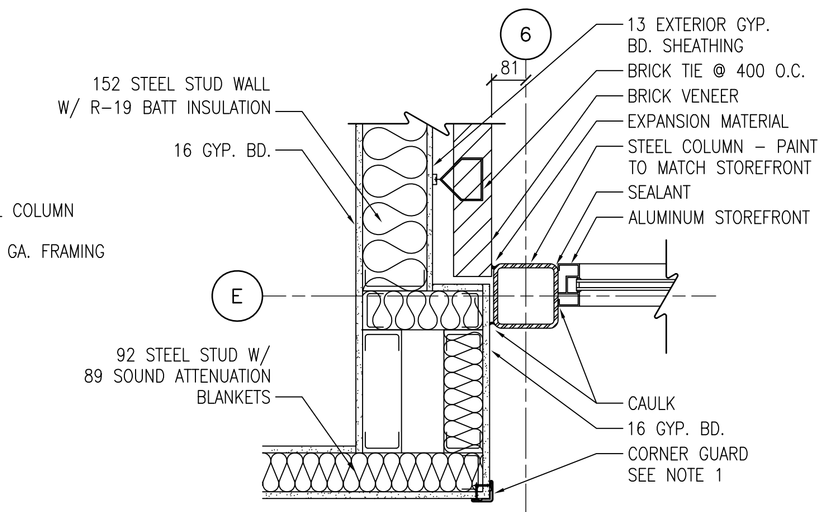

5 COLUMN DETAIL
A101 A502 SCALE: 1:10

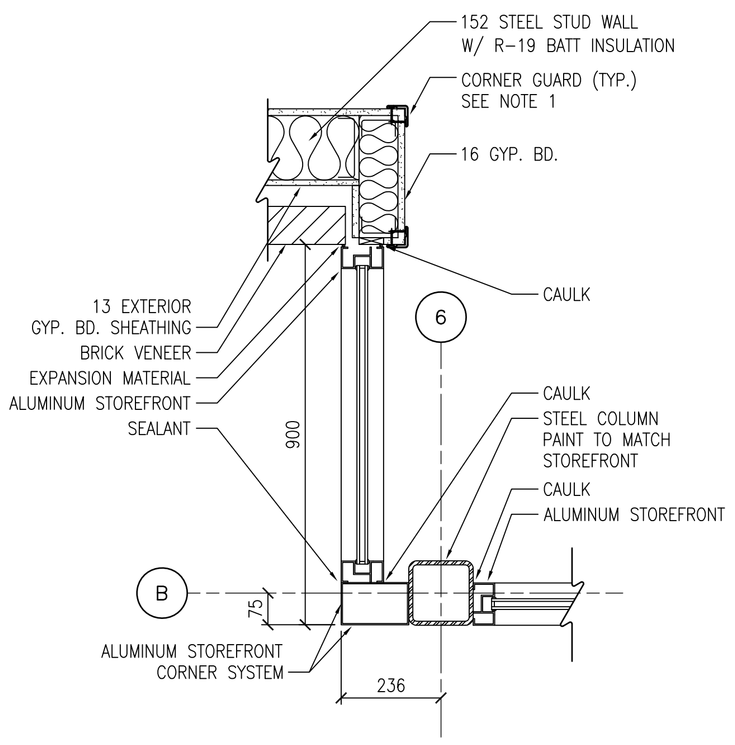

6 COLUMN DETAIL
A101 A502 SCALE: 1:10

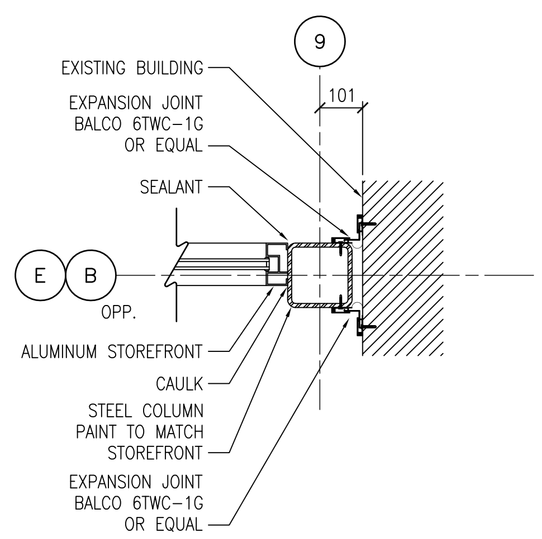

7 COLUMN DETAIL
A101 A502 SCALE: 1:10

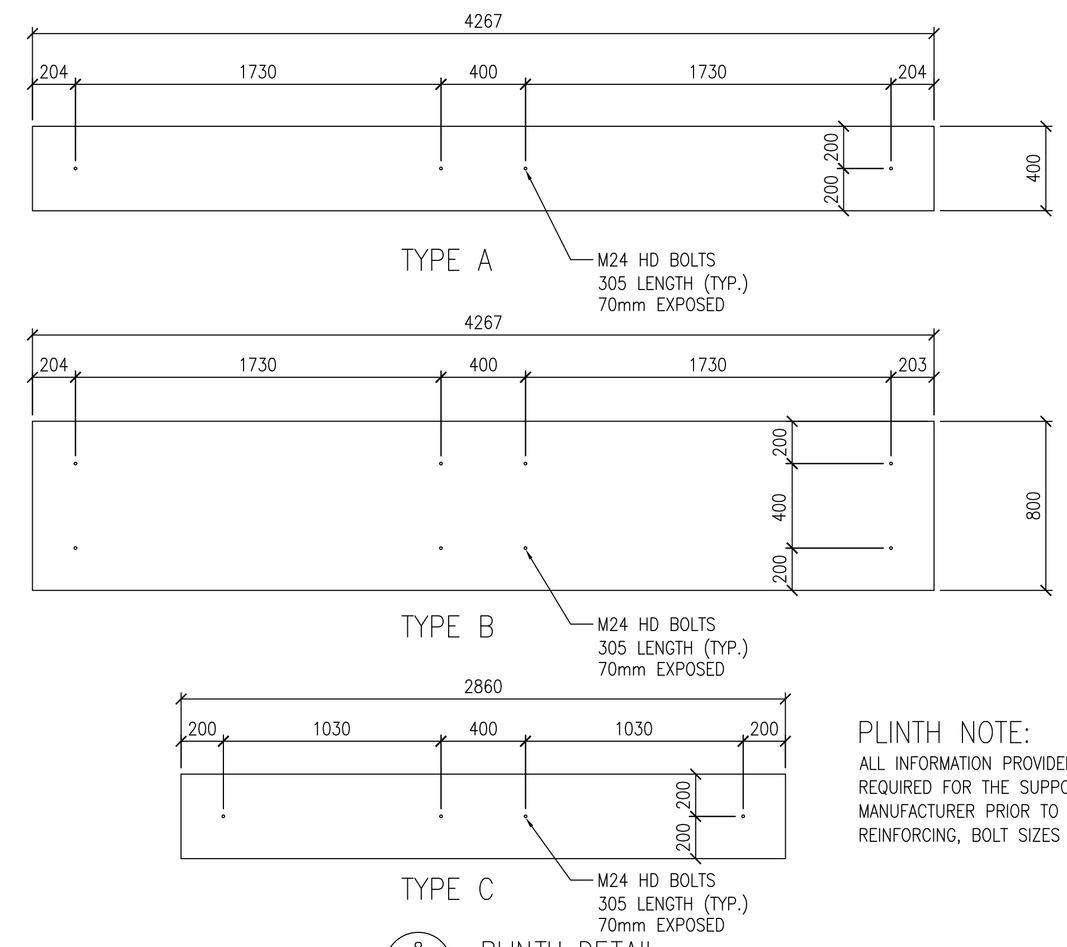

8 PLINTH DETAIL
A101 A502 SCALE: 1:20

PLINTH NOTE:

ALL INFORMATION PROVIDED WITH REGARD TO THE CONCRETE PLINTH BLOCKS REQUIRED FOR THE SUPPORT OF THE TRAINERS MUST BE VERIFIED WITH THE MANUFACTURER PRIOR TO INSTALLATION, INCLUDING EXACT LOCATIONS, DIMENSIONS, REINFORCING, BOLT SIZES AND PATTERN, AND OTHER MISCELLANEOUS ITEMS.

GENERAL NOTES

1. CORNER GUARD: KOROSEAL WALL PROTECTION SYSTEM (KOROGARD VINYL COVER) G100 51mm CORNER GUARD TYPICAL FOR ALL EXTERIOR CORNERS

NOTE:
ALL DIMENSIONS AND/OR DIMENSIONS SHOWN IN CALLOUTS/NOTES ARE IN MILLIMETERS (mm) UNLESS OTHERWISE NOTED.

GRAPHIC SCALE:

0 100 200 400
SCALE: 1:10

0 200 400 800
SCALE: 1:20

U.S. ARMY CORPS OF ENGINEERS
LITTLE ROCK DISTRICT

Mark	Description	Date	Appr.	Mark	Description	Date	Appr.

Designed by: JCB
Drawn by: JWT
Contract Date:
Reviewed by: DW
Dwg. Code:
File Name: 151001A-502
Plot date: 02/26/03
Submitted by:
Plot scale: 1:1
Atkins Benham, Inc.
Contract No.: DACA03-03-R-0031
Invitation No.: DACA03-03-R-0031

DEPARTMENT OF THE ARMY
U.S. ARMY CORPS OF ENGINEERS
LITTLE ROCK DISTRICT
LITTLE ROCK, ARKANSAS

Atkins Benham
0193 402-1900 www.atkinsbenham.com
A Division of The WS Atkins group of companies
WS Atkins

ADAL C-130J AIRCREW FUSELAGE TRAINER
LRAFB, LITTLE ROCK AR.
Project No. NKAK 043005

PLAN DETAILS

Sheet Reference Number:
A-502
Sheet 32 of 91

Drawing: F:\2402151001 LRAFB C130J FUSELAGE TRAINER\20_CAD\A\151001A-502 Saved: 03/27/2003 17:12 By: tbg DimScale: 1.00 (TM=0)
XRefs: 151001G-BS001.DWG 151001A-DT04.DWG 151001A-DT08.DWG