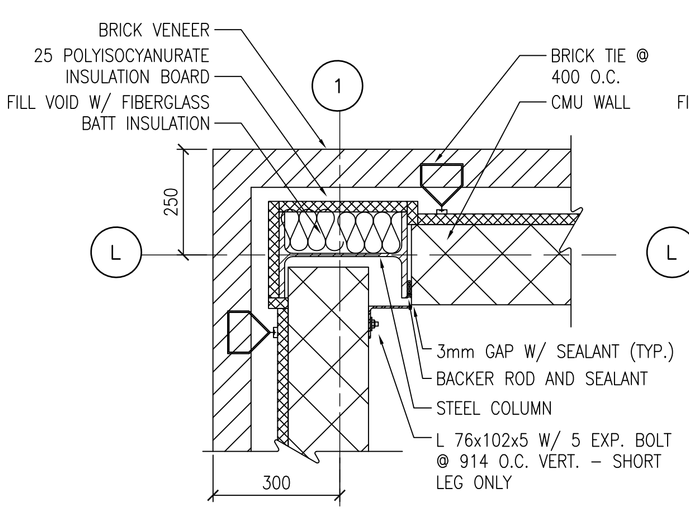

1 COLUMN DETAIL
A101 A501 SCALE: 1:20

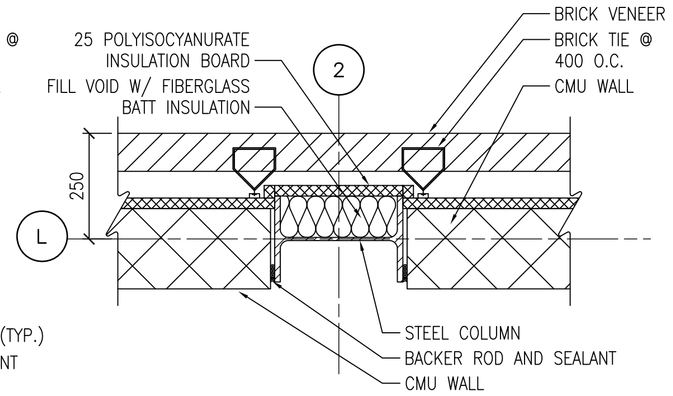

2 COLUMN DETAIL
A101 A501 SCALE: 1:10

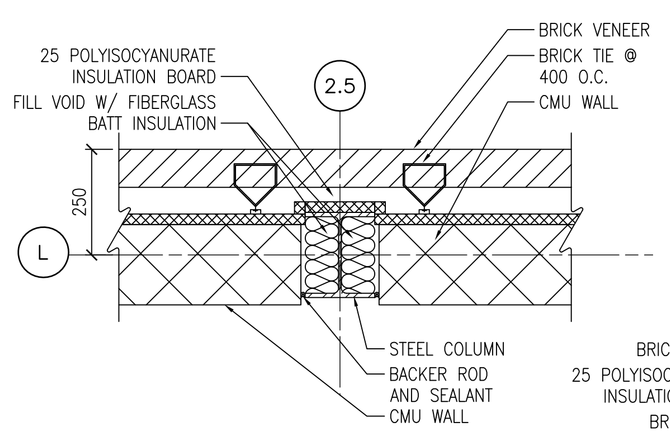

3 COLUMN DETAIL
A101 A501 SCALE: 1:10

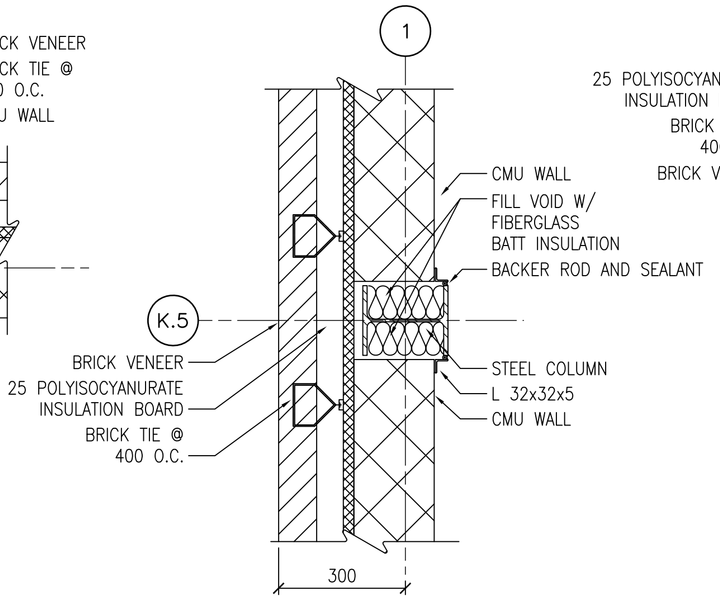

4 COLUMN DETAIL
A101 A501 SCALE: 1:10

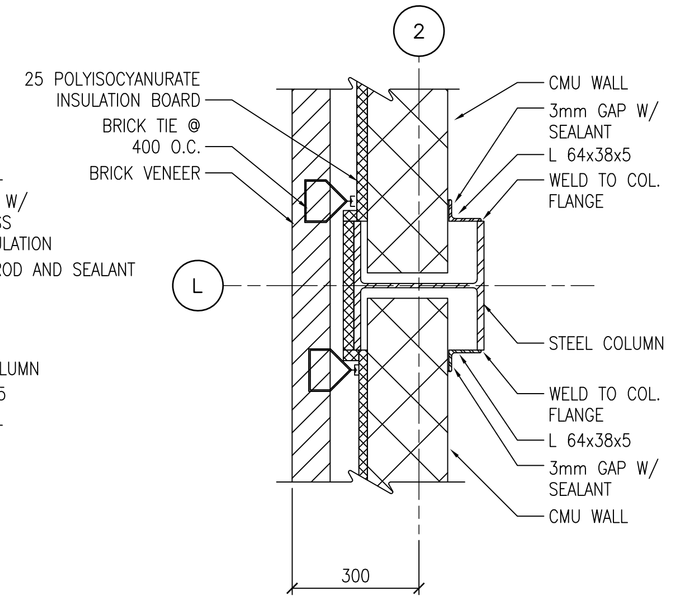

5 COLUMN DETAIL
A101 A501 SCALE: 1:10

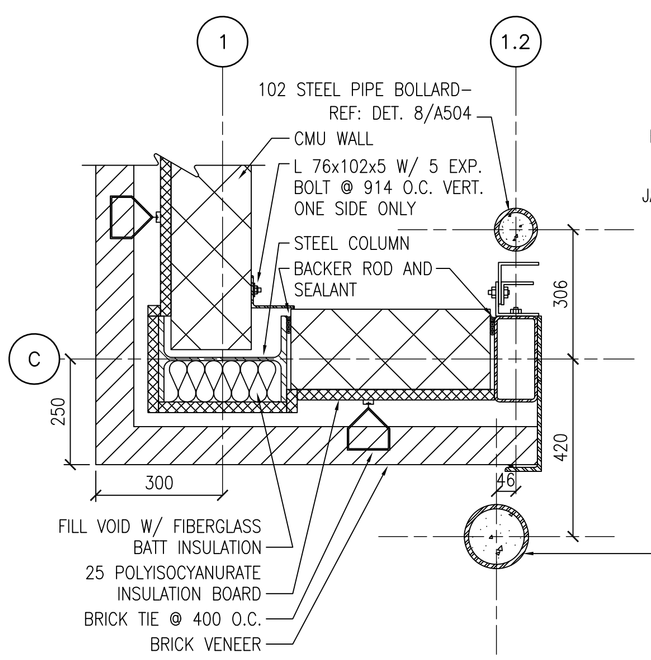

6 COLUMN DETAIL
A101 A501 SCALE: 1:10

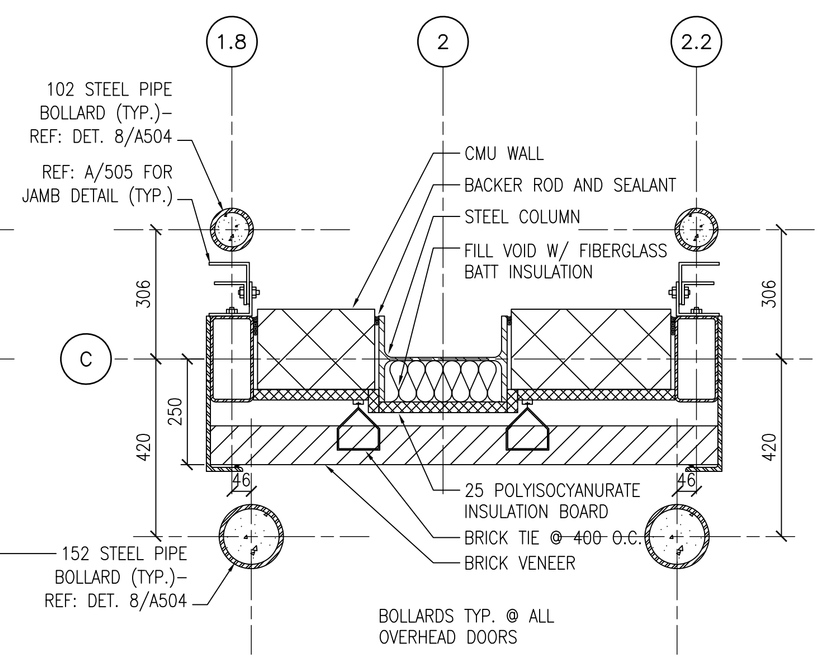

7 COLUMN DETAIL
A101 A501 SCALE: 1:10

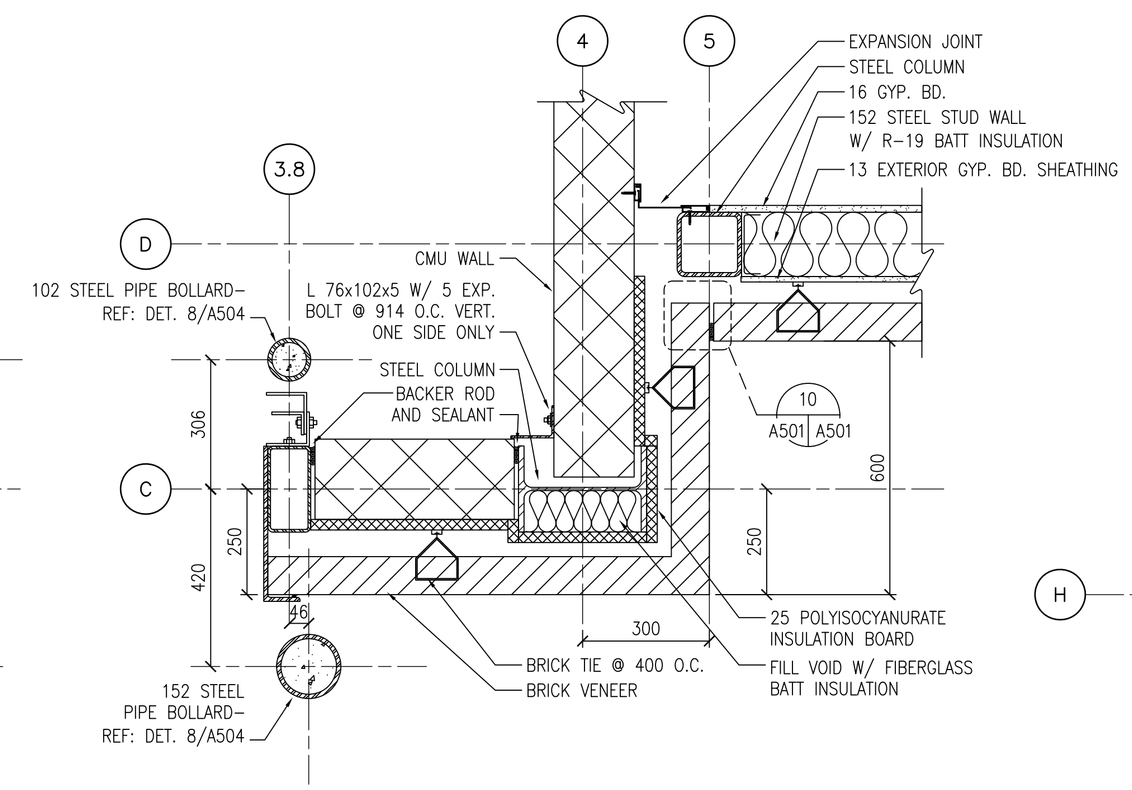

8 COLUMN DETAIL
A101 A501 SCALE: 1:10

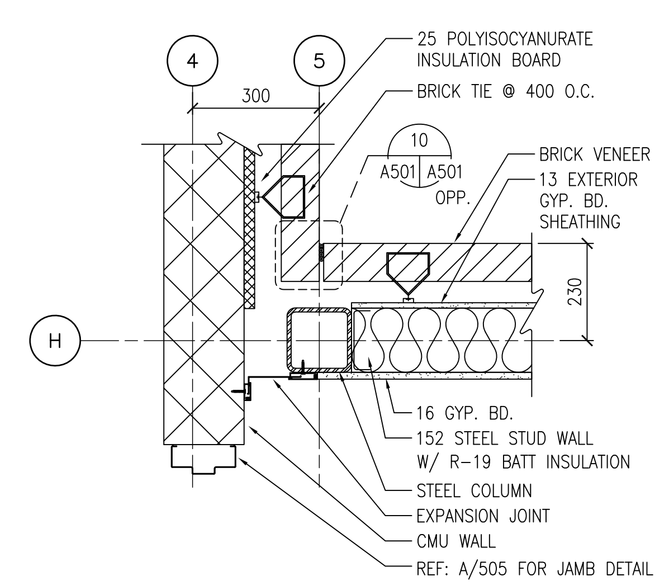

9 COLUMN DETAIL
A101 A501 SCALE: 1:10

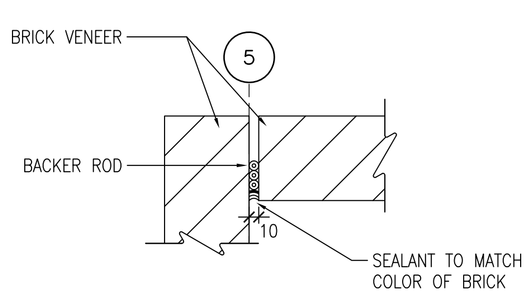

10 BRICK EXPANSION JOINT DETAIL
A101 A501 SCALE: 1:5

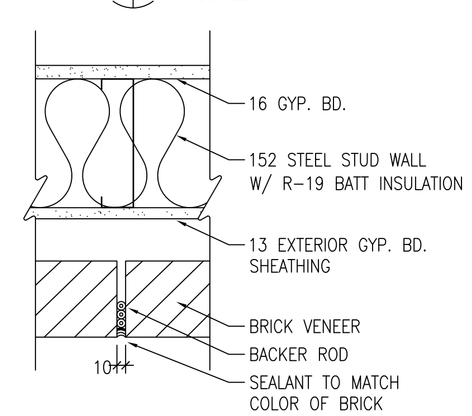

11 TYP. BRICK EXPANSION JOINT DETAIL
A501 A501 SCALE: 1:5

NOTE:
ALL DIMENSIONS AND/OR DIMENSIONS SHOWN IN CALLOUTS/NOTES ARE IN MILLIMETERS (mm) UNLESS OTHERWISE NOTED.

GRAPHIC SCALE:

0 50 100 200
SCALE: 1:5

0 100 200 400
SCALE: 1:10

U.S. ARMY CORPS OF ENGINEERS
LITTLE ROCK DISTRICT

Mark	Description	Date	Appr.	Mark	Description	Date	Appr.

Contract Date:
File Name: 151001A-501
Plot date: 02/04/03
Plot scale: 1:1
Contract No.: DACA03-03-B-0021
Drawn by: JBT
Designed by: JCB
Reviewed by: DW
Drwg. Code:
Submitted by:
Atkins Benham, Inc.
Invitation No.: DACA03-03-B-0021

DEPARTMENT OF THE ARMY
U.S. ARMY CORPS OF ENGINEERS
LITTLE ROCK DISTRICT
LITTLE ROCK, ARKANSAS

Atkins Benham
(918) 582-1500 www.atkinsbenham.com
a wholly owned subsidiary of Atkins group of companies
WS ATKINS

ADAL C-130J AIRCREW FUSELAGE TRAINER
LRAFB, LITTLE ROCK AR.
Project No. NKAK 043005

PLAN DETAILS

Sheet Reference Number:
A-501
Sheet 31 of 91

Drawing: F:\2402151001 LRAFB C130J FUSELAGE TRAINER\20_CAD\A\151001A-501 Saved: 03/27/2003 17:14
XRefs: 151001G-BS001.DWG 151001S-CP01.DWG 151001A-DT04.DWG By: tbg DimScale: 1.00 (TM=0)