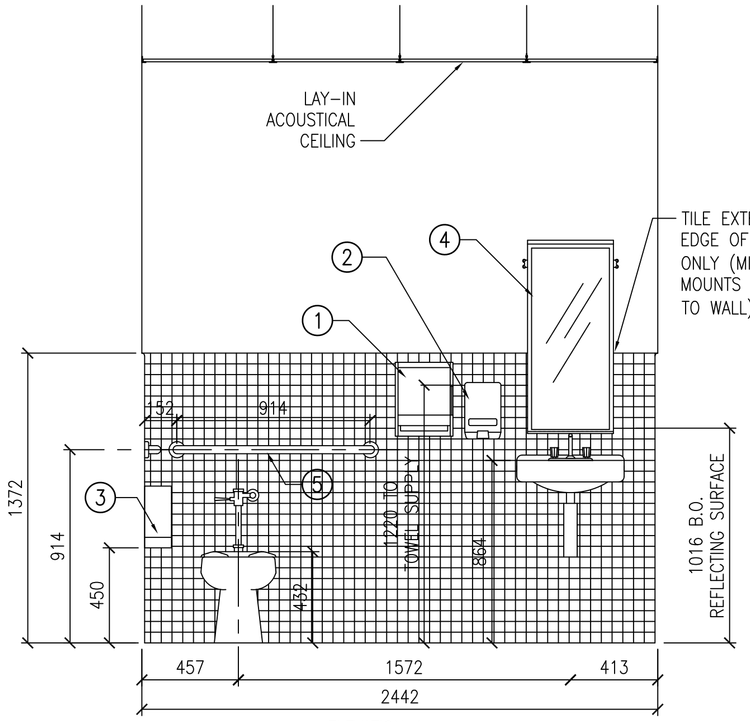

ELEVATION A
MEN'S TOILET WEST ELEV.
WOMEN'S TOILET EAST ELEV. (OPPOSITE)

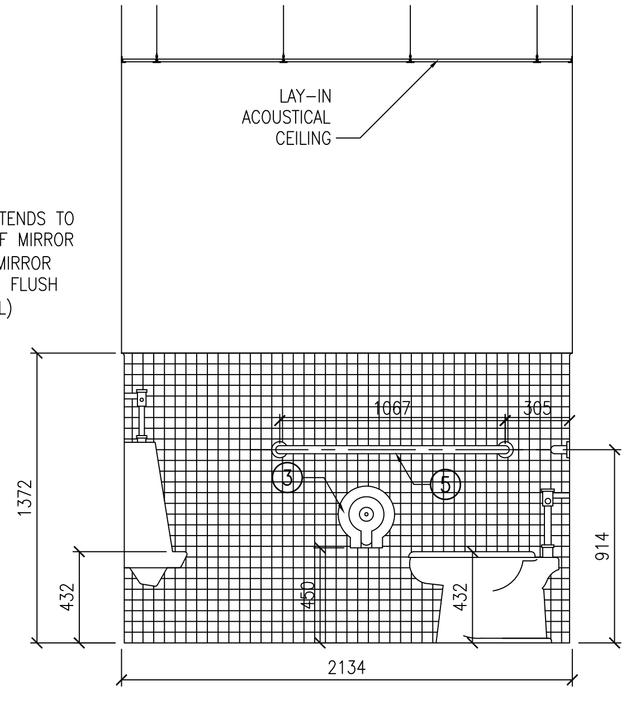

ELEVATION B
MEN'S TOILET SOUTH ELEV.

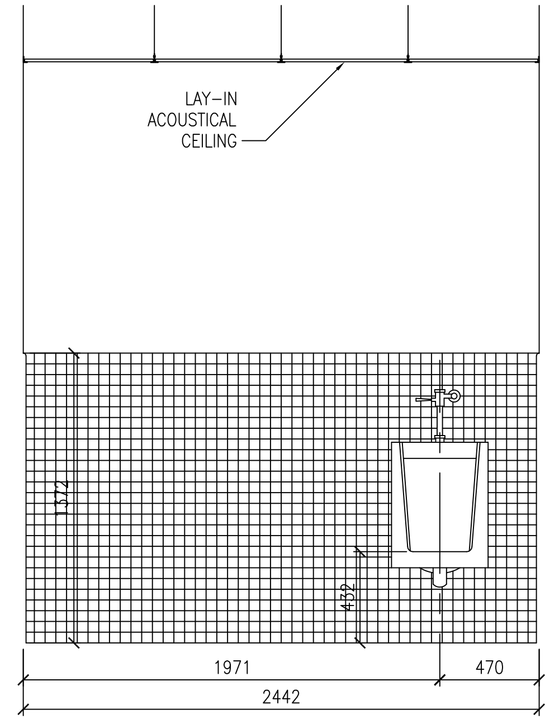

ELEVATION C
MEN'S TOILET EAST ELEV.

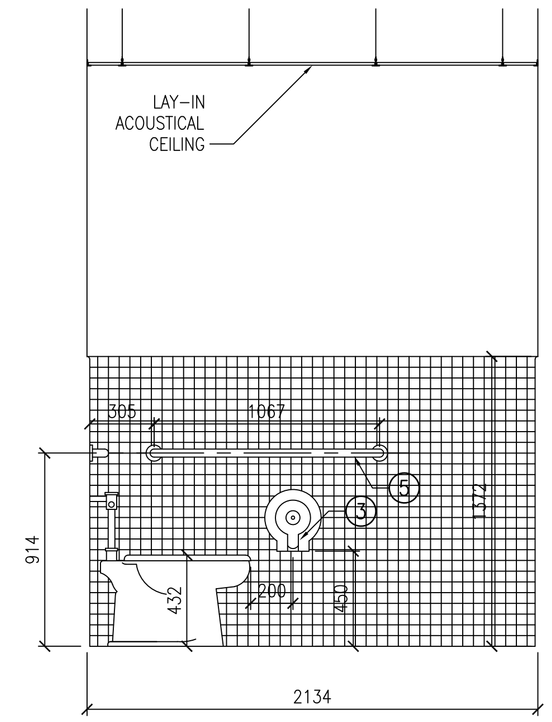

ELEVATION D
WOMEN'S TOILET SOUTH ELEV.

1 MEN'S AND WOMEN'S TOILET
A401 A402 SCALE: 1:20

REF: SHEET I401 FOR WALL TILE SIZE AND PATTERN

REF: SHEET A601 FOR TOILET ACCESSORY SCHEDULE

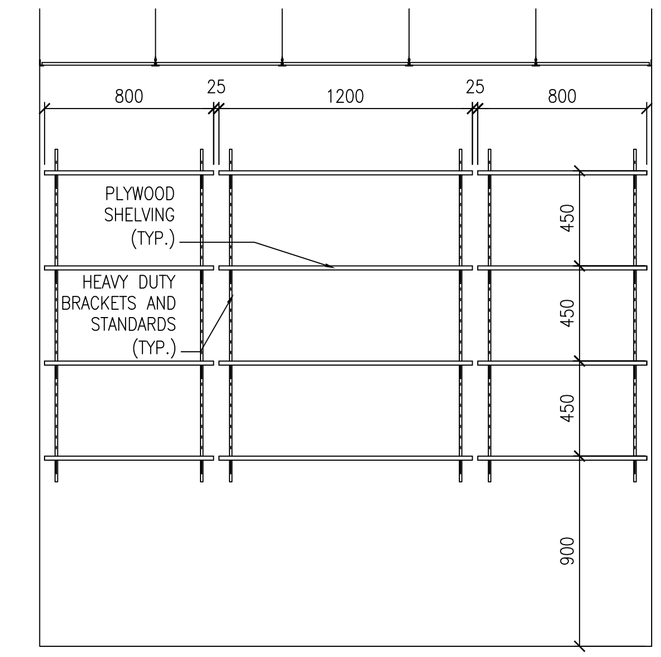

2 JANITOR CLOSET SHELVES
A401 A402 SCALE: 1:20

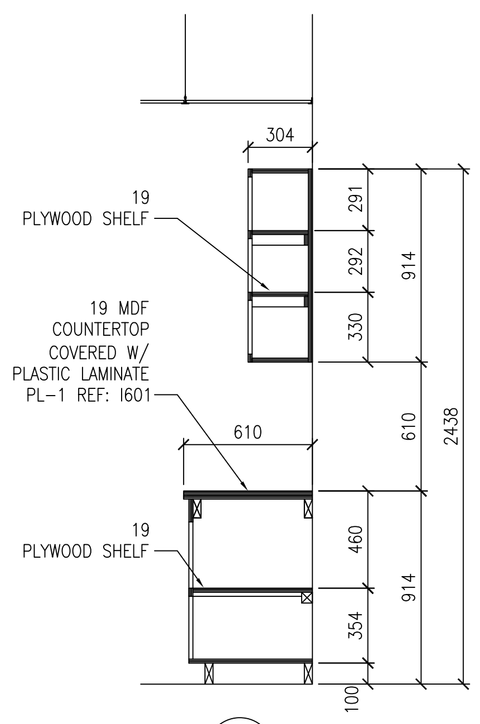

3 MAINTENANCE MILLWORK SECTION
A402 A402 SCALE: 1:20

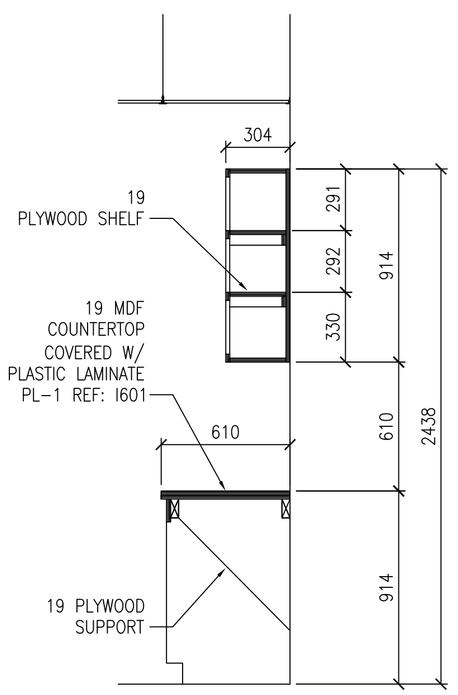

NOTE: PROVIDE STANDARD GRADE HPL ON ALL HORIZONTAL SURFACES. VERTICAL GRADE HPL MAY BE USED ON VERTICAL SURFACES. EDGEBAND ALL EXPOSED EDGES.

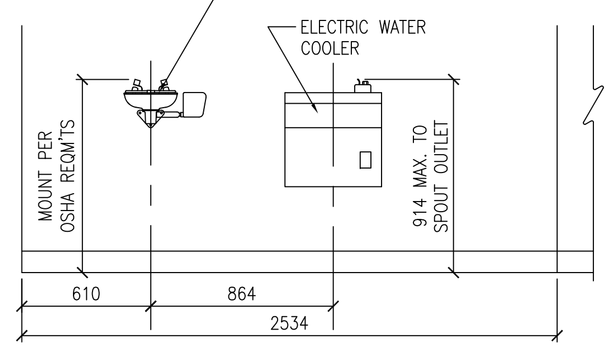

4 EYE WASH/ELECTRIC WATER COOLER ELEVATION
A401 A402 SCALE: 1:20

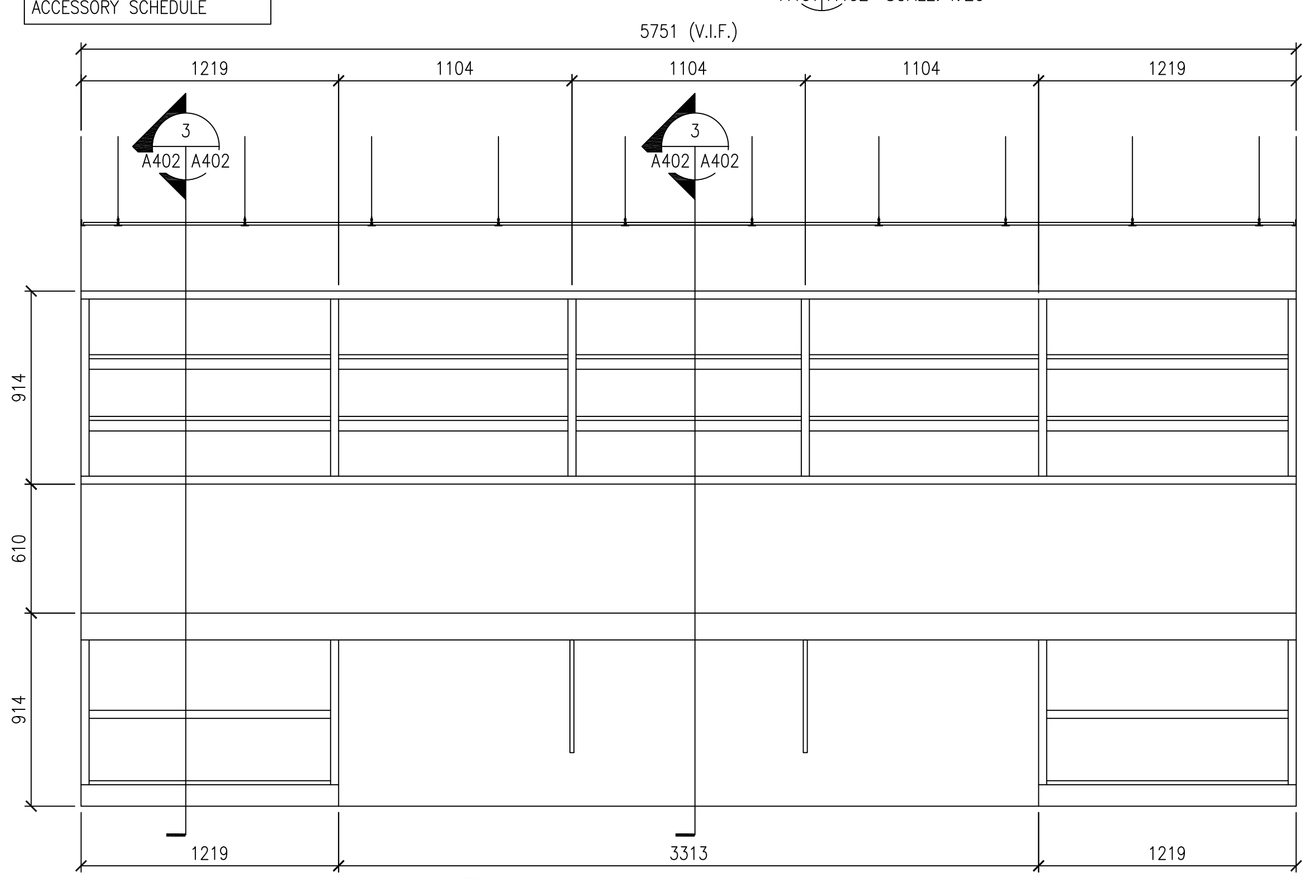

5 MAINTENANCE MILLWORK
A401 A402 SCALE: 1:20

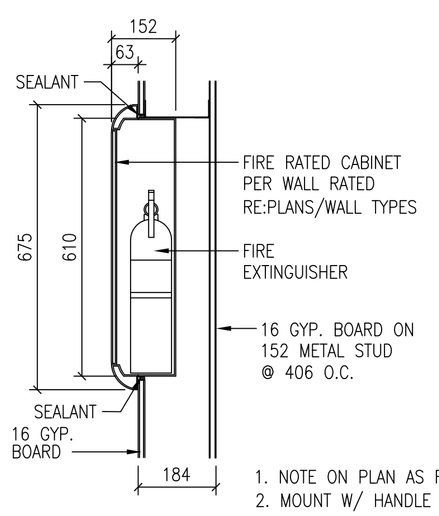

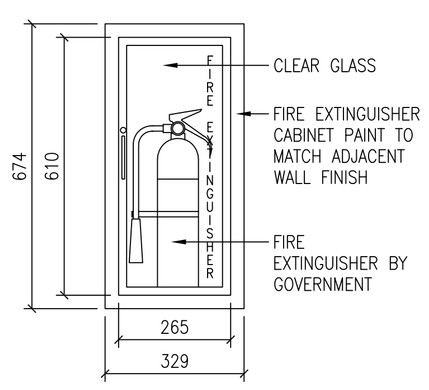

1. NOTE ON PLAN AS FE
2. MOUNT W/ HANDLE @ 1219 A.F.F. (MAX.)

6 FIRE EXTINGUISHER CABINET ELEVATION/SECTION
A401 A402 SCALE: 1:20

NOTE:
ALL DIMENSIONS AND/OR DIMENSIONS SHOWN IN CALLOUTS/NOTES ARE IN MILLIMETERS (mm) UNLESS OTHERWISE NOTED.

GRAPHIC SCALE:

0 100 200 400
SCALE: 1:10

0 200 400 800
SCALE: 1:20

U.S. ARMY CORPS OF ENGINEERS
LITTLE ROCK DISTRICT

Mark	Description	Date	Appr.	Mark	Description	Date	Appr.

Designed by: JSR
Drawn by: JKB
Reviewed by: TW
Dwg. Code:
Submitted by:
Contract Date:
File Name: 151001A-402
Plot date: 02/26/03
Plot scale: 1:1
Contract No.: DACA03-03-B-0031
Atkins Benham, Inc.
Invitation No.: DACA03-03-B-0031

DEPARTMENT OF THE ARMY
U.S. ARMY CORPS OF ENGINEERS
LITTLE ROCK DISTRICT
LITTLE ROCK, ARKANSAS

Atkins Benham
(918) 492-1991 www.atkinsbenham.com
A member of the WS Atkins group of companies
WS ATKINS

ADAL C-130J AIRCREW FUSELAGE TRAINER
LRAFB, LITTLE ROCK AR.
Project No. NWAK 043005

INTERIOR ELEVATIONS

Sheet Reference Number:
A-402
Sheet 30 of 91

Drawing: F:\2402151001 LRAFB C130J FUSELAGE TRAINER\20_CAD\A\151001A-402 Saved: 03/27/2003 17:17 By: tbg DimScale: 1.00 (TM=0)
XRefs: 151001G-BS001.DWG 151001A-EL02.DWG