GENERAL INTERIOR FINISH NOTES

1. PLANS USED FOR CLARIFICATION OF FINISH SCHEDULE. REFER TO A4.10, A4.11, A4.12 FOR PRIMARY DIRECTION ON FINISHES.
2. PAINT WEST WALL OF RECEPTION AREA A191 P-2. WALLCOVER (VWC) ALL OTHER WALLS.
3. PAINT EAST AND SOUTH WALLS OF RECEPTION E184 P-2. WALLCOVER ALL OTHER WALLS.
4. PAINT SOUTH WALL OF RECEPTION E214 P-2. WALLCOVER ALL OTHER WALLS.
5. PAINT NORTH WALL OF RECEPTION E234 P-2. WALLCOVER ALL OTHER WALLS.
6. PAINT WEST AND SOUTH WALLS OF RECEPTION F188 P-2. WALLCOVER ALL OTHER WALLS.
7. PAINT EAST AND SOUTH WALLS OF RECEPTION F185 P-2. WALLCOVER ALL OTHER WALLS.
8. PAINT WEST WALL OF RECEPTION F172 P-2. WALL COVER ALL OTHER WALLS.
9. PAINT ALL ANGLED COLUMNS & SOFFITS AT RECEPTION COUNTERS P-2.
10 REFER TO SHEETS A3.13 & A3.14 FOR ENLARGED CARPET PLANS.
11. REFER TO FINISH SCHEDULE FOR FLOORING MATERIAL NOT INDICATED ON PLANS.
12. REFER TO SHEET A3.20 FOR CERAMIC WALL TILE LAYOUT.
13. WHERE TRANSITION FINISHES FROM NEW TO EXISTING CONDITION OCCURS, PATCH EXISTING WITH MATCHING MATERIALS.
14. SEE SPEC SECTION 09650 FOR ALL FLOORING TRANSITIONS.
15. FIELD VERIFY ALL DIMENSIONS AND REPORT ANY DISCREPANCIES TO THE GOVERNMENT'S REPRESENTATIVE PRIOR TO INSTALLATION.
16. ALTERNATE #3 IS A FINISH UPGRADE FOR CORRIDORS C137, C126A, AND C158 AS

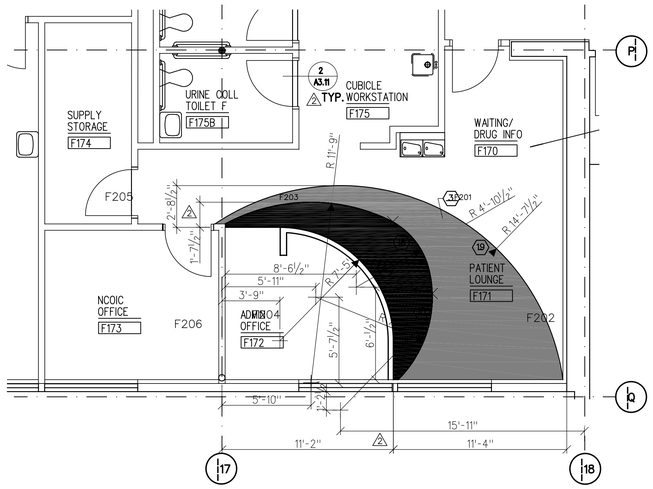

1 **PATIENT LOUNGE - F171**
SCALE 1/4"=1'-0" SCALE 1/4"=1'-0"

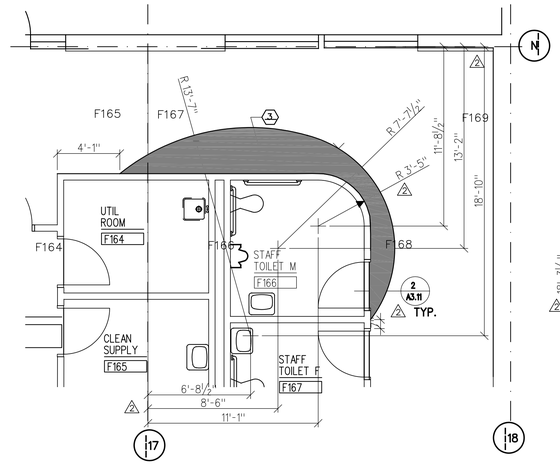

2 **CORRIDOR CARPET ACCENT - F169**
SCALE 1/4"=1'-0"

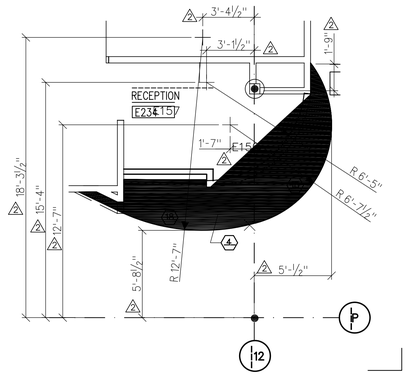

3 **RECEPTION AREA - E234**
SCALE 1/4"=1'-0"

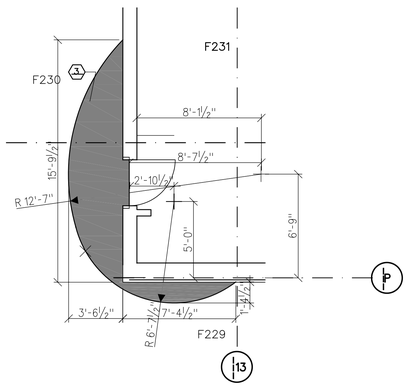

4 **PUBLIC CORRIDOR AREA - F191**
SCALE 1/4"=1'-0"

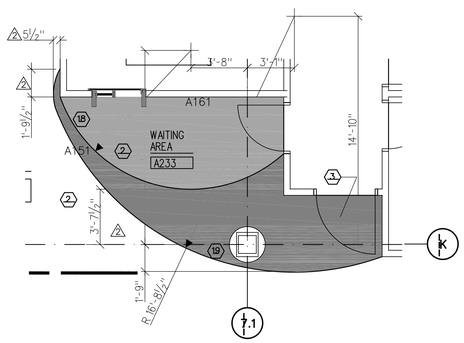

5 **WAITING AREA - A233**
SCALE 1/4"=1'-0"

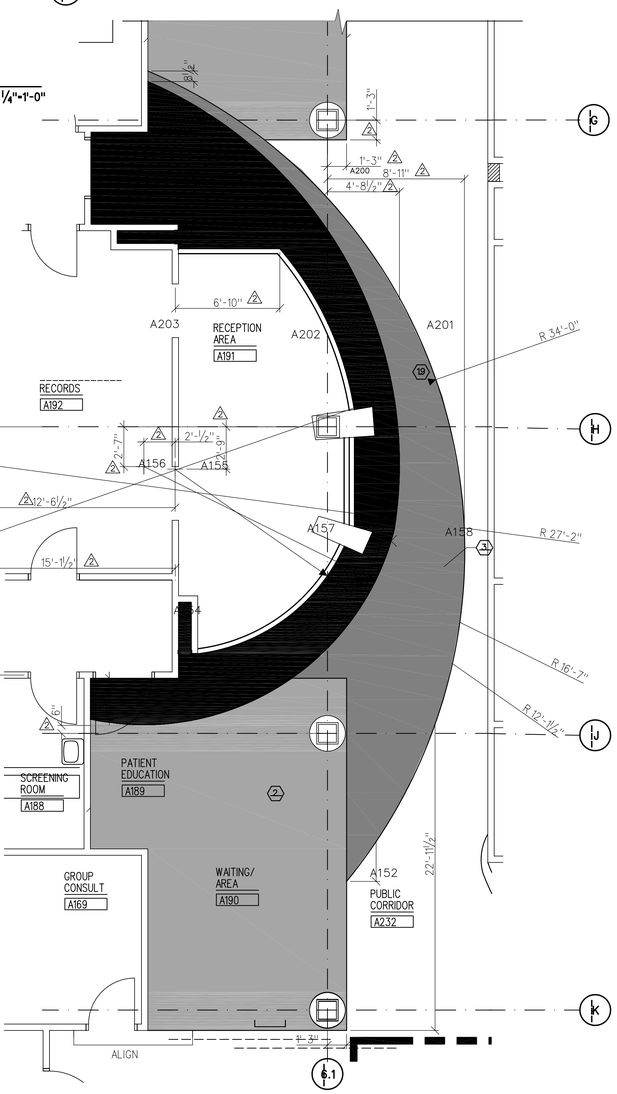

7 **RECEPTION AREA - A191**
SCALE 1/4"=1'-0"

KEYED NOTES

1. CPT-1
2. CPT-2
3. CPT-3
4. CPT-4
5. SEE FINISH SCHEDULE FOR ACCENT PAINT LOCATIONS.
6. THIS ROOM TO HAVE A 1'-6" BORDER CPT-3, & 6" BORDER CPT-4.
7. CFT
8. VINYL WALL COVERING-SEE FINISH SCHEDULE
9. ALT. #3 FLOORING WILL STOP AT DOUBLE DOORS. SEE REFLECTED CEILING PLAN A2.12 FOR LIMITS OF ALT.#3 CEILING. WINDOWS IN WAITING AREA C119 WILL BE PART OF BASE BID.
10. WALK-OFF CARPET.
11. EXISTING FINISHES NOT IN THIS CONTRACT.
12. MATCH FINISHES IN CORRIDOR.
13. MATCH EXISTING FINISHES.
14. COORDINATE WITH EDGE OF SOFFIT. SEE REFLECTED CEILING PLAN A2.11.
15. COORDINATE WITH EDGE OF SUSPENDED OPEN METAL CEILING GRID. SEE REFLECTED CEILING PLAN A2.11.
16. COORDINATE WITH EDGE OF SOFFIT. SEE REFLECTED CEILING PLAN A2.12.
17. COORDINATE WITH EDGE OF SUSPENDED OPEN METAL CEILING GRID. SEE REFLECTED CEILING PLAN A2.12.
18. COORDINATE WITH EDGE OF SOFFIT. SEE REFLECTED CEILING PLAN A2.13.
19. COORDINATE WITH EDGE OF SUSPENDED OPEN METAL CEILING GRID. SEE REFLECTED CEILING PLAN A2.13.
20. COORDINATE WITH EDGE OF REVERSE SOFFIT. SEE REFLECTED CEILING PLAN A2.12.
21. COORDINATE WITH EDGE OF REVERSE SOFFIT. SEE REFLECTED CEILING PLAN A2.13.

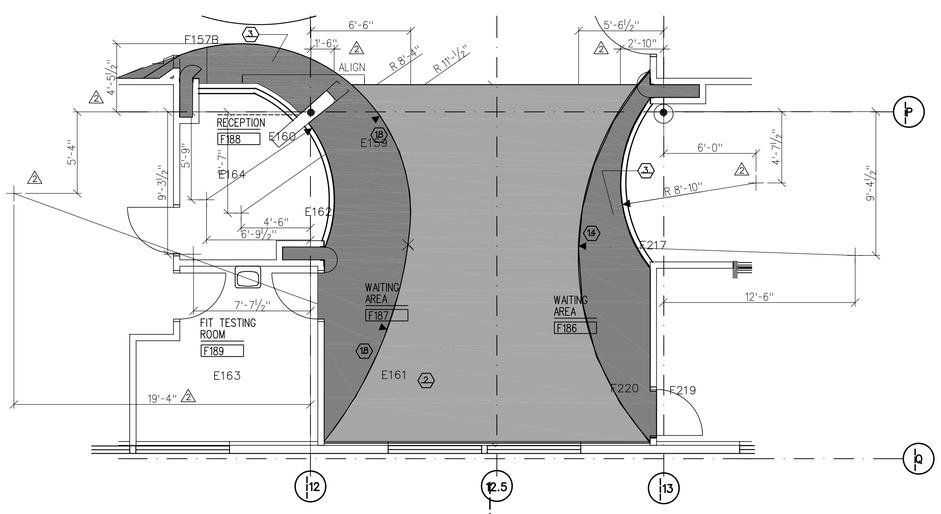

6 **CARPET PATTERN - F186, F187**
SCALE 1/4"=1'-0"

US Army Corps of Engineers
Huntsville
Alabama

SYMBOL	AMENDMENT DESCRIPTION	DATE	APPROVED	SYMBOL	AMENDMENT DESCRIPTION	DATE	APPROVED
1	SD-1 ADDENDUM #1	10/10/2003					
2	REVISIONS AS-BUILT	8/01/2005					
3	ISSUED FOR FINAL WORK PLAN	10/31/2003					
4	ISSUED FOR BID	10/01/2003					

DESIGNED BY: - DATE: 10/10/2003
DRAWN BY: - PROJECT NO: 51503
CHECKED BY: - DRAWING CODE: -
REVIEWED BY: - SOLICITATION NUMBER: -

U.S. ARMY ENGINEERING AND SUPPORT CENTER
CORPS OF ENGINEERS
HUNTSVILLE, ALABAMA

EARTH TECH
320 Bellevue Rd. • Oak Ridge, TN 37830 • (865) 574-3000

RENOVATE CLINIC
BUILDING 1090
LITTLE ROCK AFB, ARKANSAS

ENLARGED CARPET PLANS AS-BUILT

SHEET REFERENCE NUMBER:
A3.13
SHEET X OF XX

$port$
no pen table
$$ones
$dates