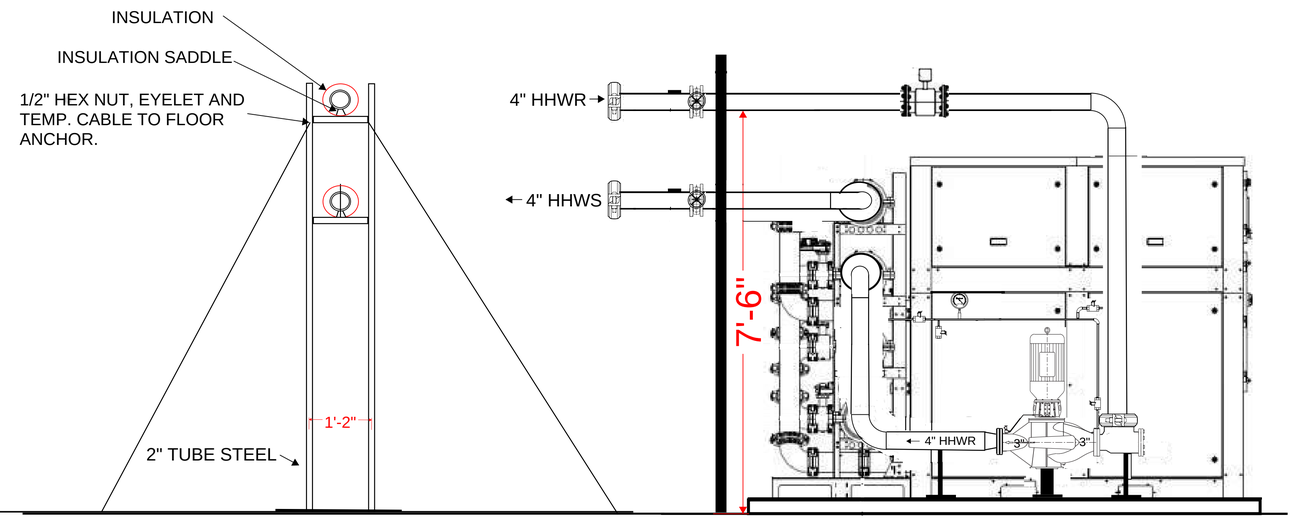

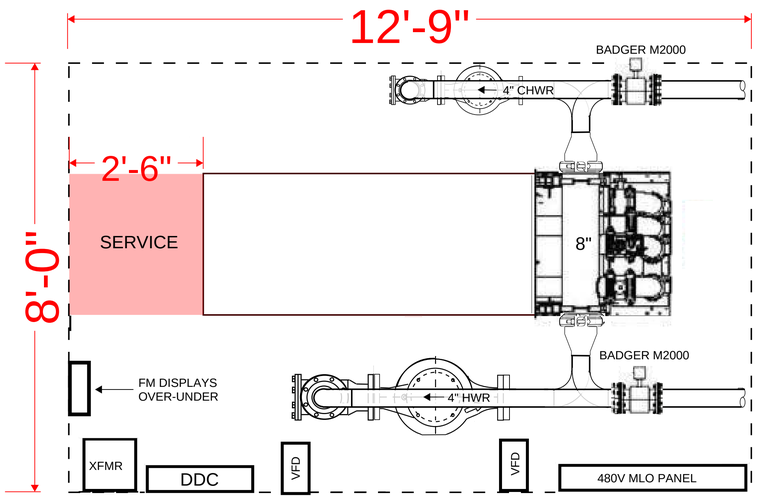

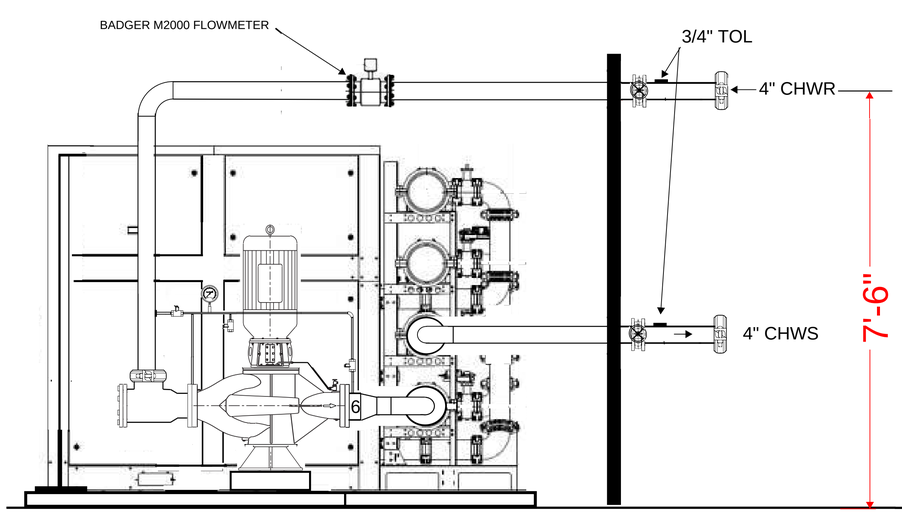

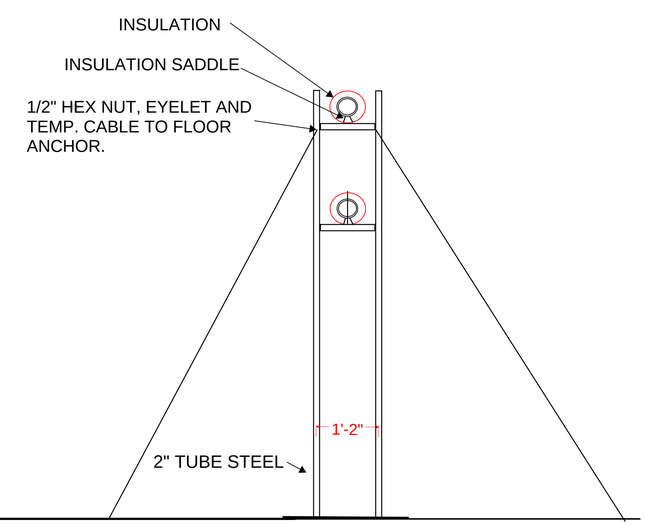

3/4"=1'-0"

ENFRA

CLINTON SUSTAINABLE ENERGY DISTRICT

CLINTON FOUNDATION
LITTLE ROCK, ARKANSAS

MARK	DATE	DESCRIPTION

ISSUE DATE: 7-8-25

PROJECT NUMBER:

SHEET TITLE:
WILLIAM J. CLINTON - CENTRAL UTILITY PLANT - HEAT PUMP CHILLER SKID

SHEET NUMBER:
M1