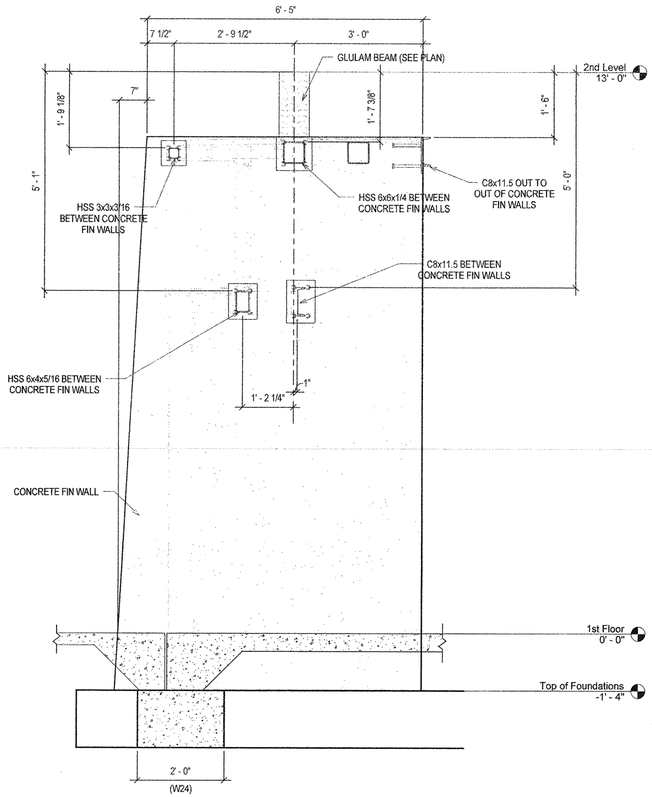

1 SECTION THRU CONCRETE FIN WALL
3/4" = 1'-0"
(RE: 10/A403)

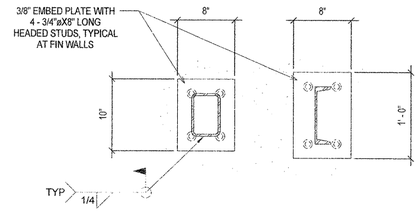

2 DETAIL AT EMBEDS
1 1/2" = 1'-0"

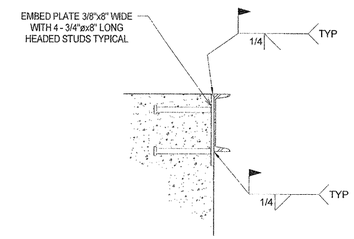

3 DETAIL AT CHANNEL AND EMBED
1 1/2" = 1'-0"

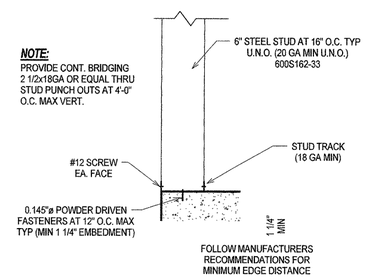

4 TYPICAL METAL STUDS AT EXTERIOR WALLS
1 1/2" = 1'-0"

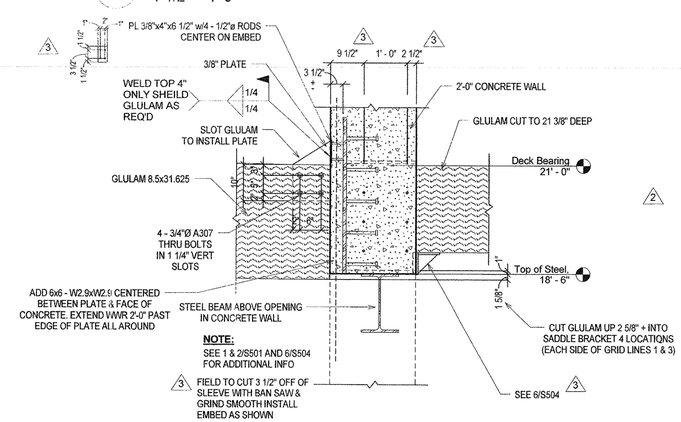

5 SECTION THRU GLULAM AND BRACKET
3/4" = 1'-0"

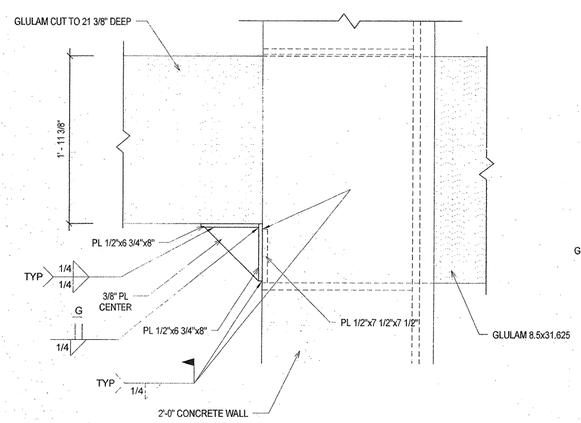

6 DETAIL OF WALL BRACKETS
1 1/2" = 1'-0"

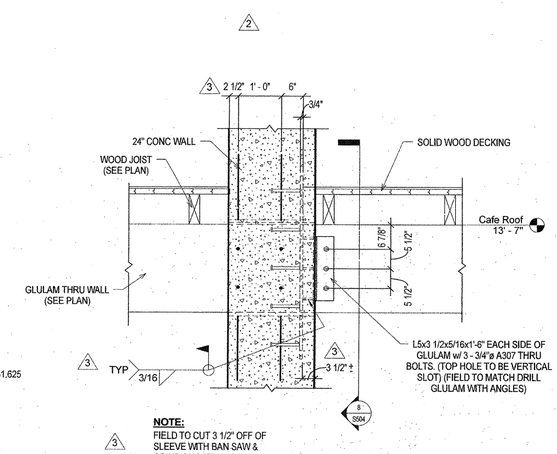

7 SECTION THRU GLULAM BRACKET
3/4" = 1'-0"

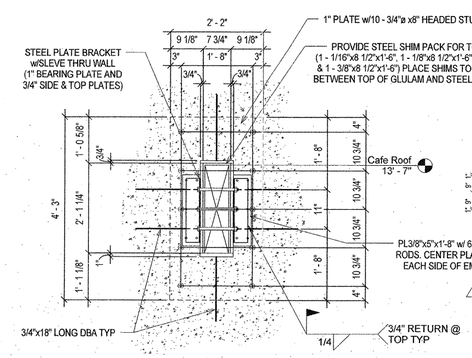

8 SECTION THRU GLULAM BRACKET
3/4" = 1'-0"

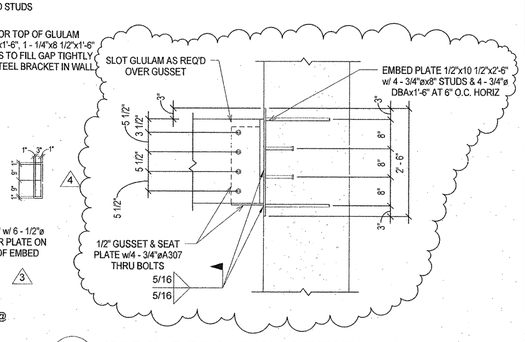

9 SECTION THRU GLULAM CONNECTION TO WALL
3/4" = 1'-0"

POLK STANLEY ROWLAND CURZON PORTER
ARCHITECTS, LTD

700 SOUTH SCHILLER
LITTLE ROCK, AR 72201
501.378.0878 office
501.372.7629 fax

509 W. SPRING STREET, SUITE 150
FAYETTEVILLE, AR 72701
479.444.0473 office
479.251.7216 fax

www.polkstanley.com

CONSULTANTS:

CIVIL ENGINEER:
MCCLELLAND ENGINEERS

LANDSCAPE ARCHITECT:
LARSON BURNS SMITH

STRUCTURAL ENGINEER:
CROMWELL ENGINEERS INC.

MECH., ELEC., PLUMB ENGINEER:
CROMWELL ENGINEERS INC.

GLOBAL VILLAGE CONSULTANT
CAMBRIDGE SEVEN ASSOCIATES

INTERIOR DESIGNER:
POLK STANLEY ROWLAND CURZON PORTER ARCHITECTS

GENERAL CONTRACTOR:
CDI CONTRACTORS, INC.

NOTES:

ISSUE DATE:
17 SEPTEMBER 07

REVISIONS:

#	DATE:	DESCRIPTION:
1	10 OCT 07	ADDENDUM 02
2	7 MAR 08	ASI 05
3	14 APR 08	ASI 09
4	30 APR 08	ASI 11

MURPHY KELLER EDUCATION CENTER

HEIFER INTERNATIONAL CENTER

LITTLE ROCK, ARKANSAS

PSRCP JOB NUMBER:
431E

CONTENTS:
SECTIONS AND DETAILS

SHEET NUMBER:
S504