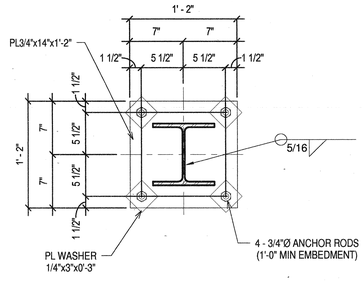

A W8x35 COLUMN

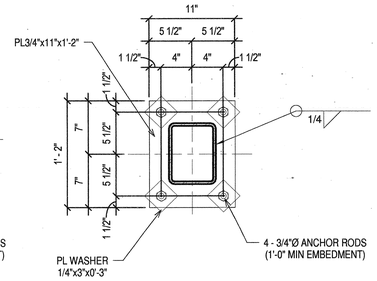

B HSS8x6 COLUMN

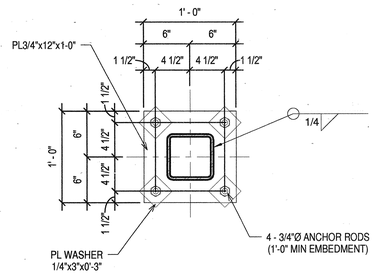

C HSS6x6 COLUMN

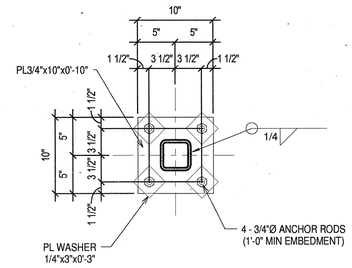

D HSS4x4 COLUMN

F HSS3x3 COLUMN

1 COLUMN BASE PLATE DETAILS
1 1/2" = 1'-0"

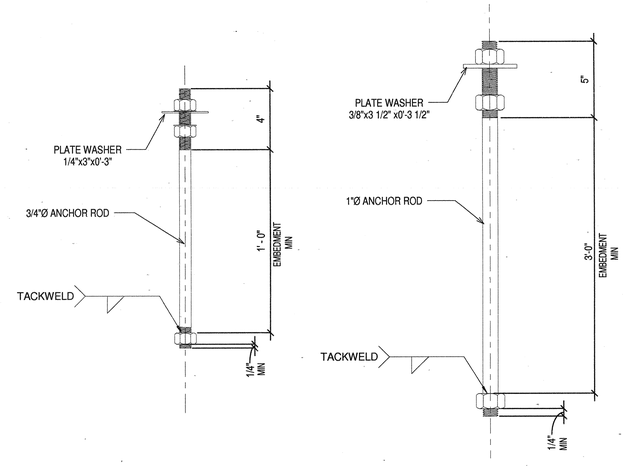

2 TYPICAL ANCHOR ROD DETAILS
3" = 1'-0"

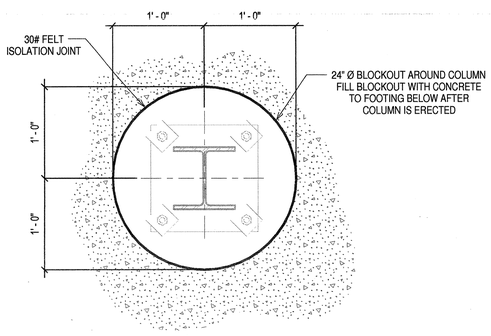

3 TYPICAL SLAB BLOCKOUT AROUND STEEL COLUMN
1 1/2" = 1'-0"

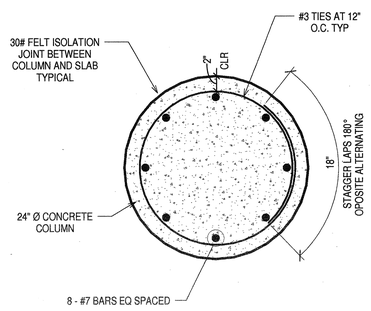

4 TYPICAL CONCRETE COLUMN DETAIL
1 1/2" = 1'-0"

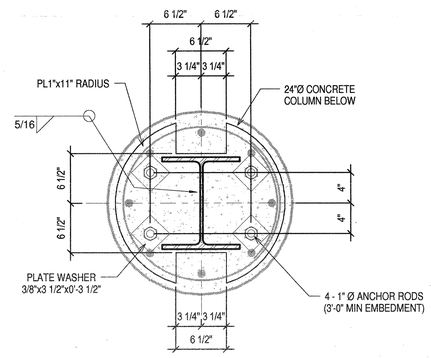

5 BASE PLATE DETAIL W12x53 TO 24" Ø CONCRETE
1 1/2" = 1'-0"

POLK
STANLEY
ROWLAND
CURZON
PORTER
ARCHITECTS, LTD.

700 SOUTH SCHILLER
LITTLE ROCK, AR 72201
501.378.0878 office
501.372.7629 fax

509 W. SPRING STREET, SUITE 150
FAYETTEVILLE, AR 72701
479.444.0473 office
473.251.7216 fax

www.polkstanley.com

CONSULTANTS:

CIVIL ENGINEER:
MCCLELLAND ENGINEERS

LANDSCAPE ARCHITECT:
LARSON BURNS SMITH

STRUCTURAL ENGINEER:
CROMWELL ENGINEERS INC.

MECH., ELEC., PLUMB ENGINEER:
CROMWELL ENGINEERS INC.

GLOBAL VILLAGE CONSULTANT
CAMBRIDGE SEVEN ASSOCIATES

INTERIOR DESIGNER:
POLK STANLEY ROWLAND
CURZON PORTER ARCHITECTS

GENERAL CONTRACTOR:
CDI CONTRACTORS, INC.

NOTES:

ISSUE DATE:
17 SEPTEMBER 07

REVISIONS:

#	DATE:	DESCRIPTION:

MURPHY KELLER
EDUCATION CENTER

HEIFER
INTERNATIONAL
CENTER

LITTLE ROCK, ARKANSAS

PSRCP JOB NUMBER:
431E

CONTENTS:
FOUNDATION
SECTIONS AND
DETAILS

SHEET NUMBER:
S303