GENERAL NOTES:

1. PROVIDE TRAP PRIMER GUARD INSERTS FOR FLOOR DRAINS IN TOILETS, MECHANICAL ROOMS AND KITCHEN AREA .
2. ALL DOMESTIC WATER PIPING SHALL BE INSULATED.
3. PROVIDE INSULATION FOR ALL HORIZONTAL AND VERTICAL STORM PIPING ABOVE GRADE INSIDE THE BUILDING.

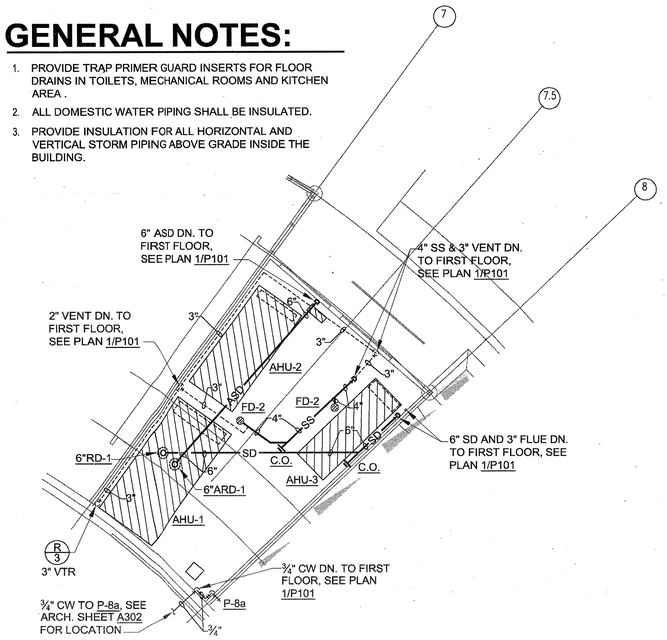

NORTH PLUMBING MEZZANINE PLAN (1)
SCALE: 1/8"=1'-0"

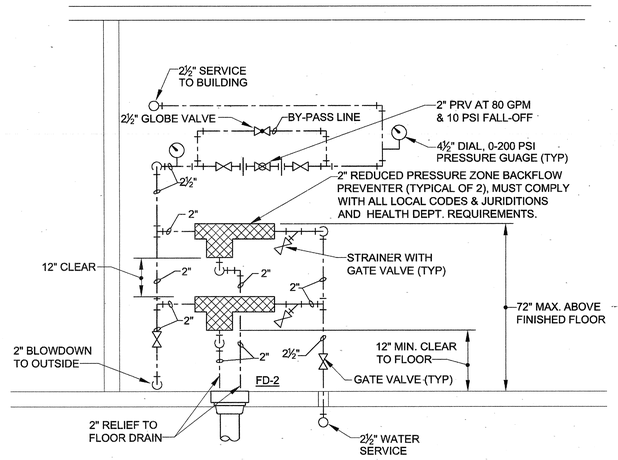

BACKFLOW PREVENTER (RPZBFP) (2)
NO SCALE

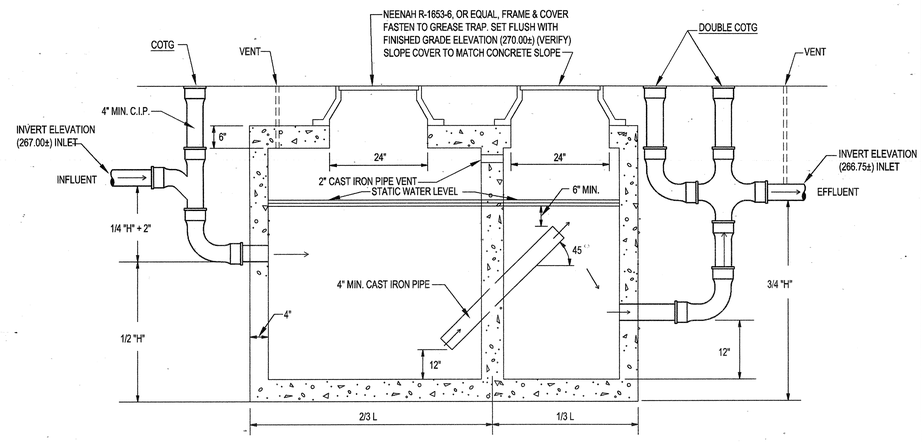

NOTES:

1. TANK SIZED FOR 12 MINUTE DETENTION TIME WITH A MINIMUN SIZE OF 2000 GALLONS.
2. VENT AS PER STATE PLUMBING CODE LATEST REVISION.

GREASE TRAP DETAIL (GT-1) (3)
NO SCALE

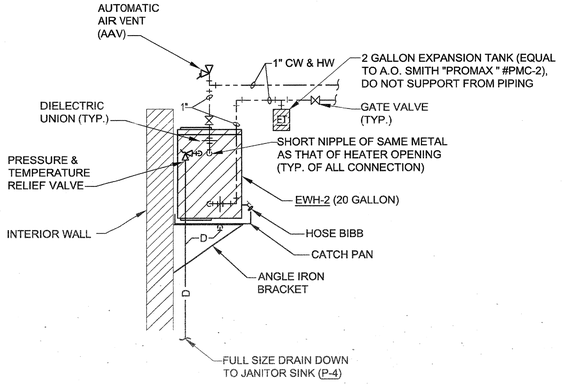

ELECTRIC WATER HEATER PIPING DIAGRAM (EWH-2) (4)
NO SCALE

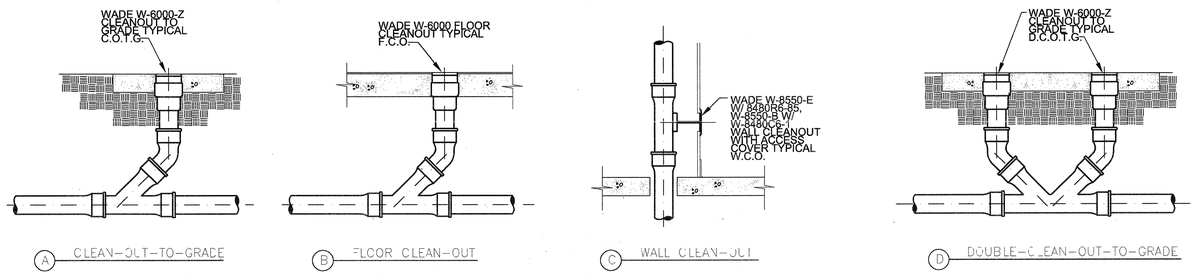

(A) CLEAN-OUT-TO-GRADE
(B) FLOOR CLEAN-OUT
(C) WALL CLEAN-OUT
(D) DOUBLE-CLEAN-OUT-TO-GRADE

TYPICAL CLEANOUT (5)
NO SCALE

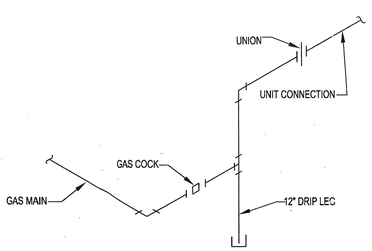

TYPICAL GAS PIPING CONNECTION (6)
NO SCALE

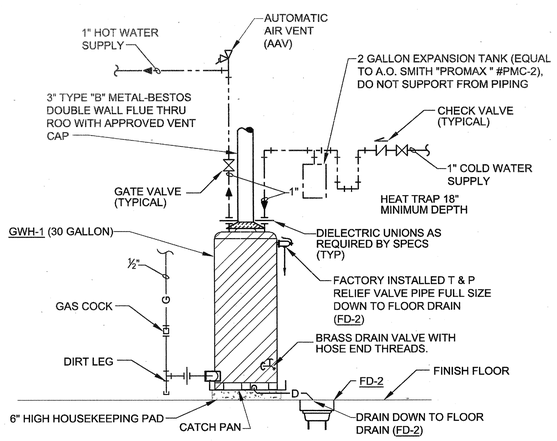

GAS WATER HEATER PIPING DIAGRAM (GWH-1) (7)
NO SCALE

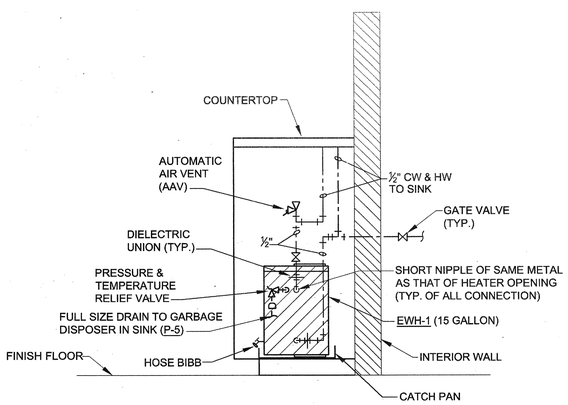

ELECTRIC WATER HEATER PIPING DIAGRAM (EWH-1) (8)
NO SCALE

POLK STANLEY ROWLAND CURZON PORTER
ARCHITECTS, LTD.

700 SOUTH SCHILLER
LITTLE ROCK, AR 72201
501.378.0878 office
501.372.7629 fax

509 W. SPRING STREET,
SUITE 150
FAYETTEVILLE, AR 72701
479.444.0473 office
473.251.7216 fax

www.polkstanley.com

CONSULTANTS:

CIVIL ENGINEER:
MCCLELLAND ENGINEERS

LANDSCAPE ARCHITECT:
LARSON BURNS SMITH

STRUCTURAL ENGINEER:
CROMWELL ENGINEERS INC.

MECH., ELEC., PLUMB. ENGINEER:
CROMWELL ENGINEERS INC.

GLOBAL VILLAGE CONSULTANT
CAMBRIDGE SEVEN ASSOCIATES

INTERIOR DESIGNER:
POLK STANLEY ROWLAND
CURZON PORTER ARCHITECTS

GENERAL CONTRACTOR:
CDI CONTRACTORS, INC.

NOTES:

ISSUE DATE:
17 SEPTEMBER 2007

REVISIONS:

#	DATE:	DESCRIPTION:

MURPHY - KELLER
EDUCATIONAL CENTER

HEIFER
INTERNATIONAL
CENTER

LITTLE ROCK, ARKANSAS

PSRCP JOB NUMBER:
431E

CONTENTS:
PLUMBING MEZZANINE
PLAN & DETAILS

SHEET NUMBER:
P501

CERTIFICATE OF AUTHORIZATION ARKANSAS ENGINEER
CROMWELL ENGINEERS #55

STATE OF ARKANSAS
REGISTERED PROFESSIONAL ENGINEER
No. 9405
9/17/07