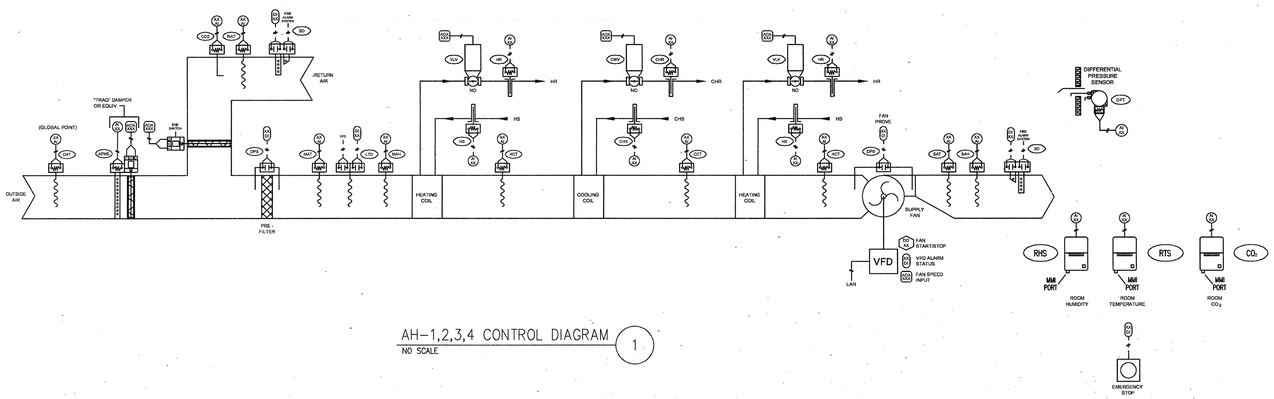

AH-1,2,3,4 CONTROL DIAGRAM (1)

NO SCALE

CONTROL LEGEND

SYMBOL	DESCRIPTION	SYMBOL	DESCRIPTION
AI	ANALOG INPUT POINT	VFD	VARIABLE FREQUENCY DRIVE
AO	ANALOG OUTPUT POINT	AFMS	AIR FLOW MONITOR
DI	DIGITAL INPUT POINT	CC	CHILLED WATER COIL
DO	DIGITAL OUTPUT POINT	HC	HOT WATER COIL
DPS	DIFFERENTIAL PRESSURE SENSOR	HSL	HIGH STATIC LIMIT
SP	STATIC PRESSURE SENSOR	T	ROOM TEMPERATURE SENSOR
SD	SMOKE DETECTOR	H	HUMIDITY SENSOR
DA	DAMPER ACTUATOR	CO2	CO2 SENSOR
FBD	FACE & BYPASS DAMPER	NO	NORMALLY OPEN
SAT	SUPPLY AIR TEMPERATURE SENSOR	NC	NORMALLY CLOSED
PHT	PREHEAT TEMPERATURE	C	COMMON
CCT	COOLING COIL TEMPERATURE	S	SUPPLY
MAT	MIXED AIR TEMPERATURE	R	RETURN
LTD	LOW TEMPERATURE DETECTOR	DM	DAMPER MOTOR
HWV	HOT WATER VALVE	SDM	SMOKE DAMPER MOTOR
CWV	CHILLED WATER VALVE	CWV	CHILLED WATER VALVE
DTS	DISCHARGE AIR TEMPERATURE	CHR	CHILLED WATER RETURN
OSAT	OUTSIDE AIR TEMPERATURE SENSOR	CHS	CHILLED WATER SUPPLY
MAH	MIXED AIR HUMIDITY	HR	HOT WATER RETURN
SAH	SUPPLY AIR HUMIDITY SENSOR	HS	HOT WATER SUPPLY
RAT	RETURN AIR TEMPERATURE SENSOR		

SEQUENCE OF OPERATIONS: AH-1,2,3,4

1. System Off
   Under unoccupied conditions, system will be off. When system is off, the air handling unit supply fan is off. The outside air damper is closed, and the return damper is closed. The normally closed two-way control valve to the cooling and heating coils will be in the closed position.

2. System Start
   When the system is called to start (system is to be operated according to an occupancy schedule), the return air damper shall open. When the return air damper has proven 100% open by its end switch, the supply fan shall start. The outside air damper shall be set to intake minimum outside air required. The return damper shall be coordinated to deliver the balance of the supply air that is being discharged.

   When the system comes on line, air handling unit and return fan shall be placed under the control of the BAS.

3. System Run
   A temperature sensor located in the supply fan discharge will modulate the two-way chilled water control valve and heating coil control valve as required to maintain discharge dry-bulb temperature and set point immediately downstream of the coil (initially set at 53°F cooling, 85°F heating- adjustable).

4. Normal Operation
   Cooling
   Under normal operation, the air handler shall run delivering a variable volume of air between 25% and 100% (adjustable) of scheduled cooling airflow. Outside air damper shall modulate to maintain minimum outside air requirements (based on CO2 readings), and maintain space pressurization.
   Cooling/Dehumidifying
   When air handler airflow has reached 25% of scheduled airflow, the cooling coil shall modulate to maintain space temperature. If space humidity rises above setpoint, the cooling coil discharge temperature shall be set at 53°F (adjustable), and the reheat hot water valve shall modulate to maintain space temperature. Outside air damper shall modulate to maintain minimum outside air requirements (based on CO2 readings), and maintain space pressurization.
   Preheating
   The preheat hot water valve shall modulate to maintain 53° downstream of the preheat coil.
   Reheating
   Air handler shall deliver 25% of the scheduled airflow (adjustable). The reheat hot water valve shall modulate to maintain space temperature. Outside air damper shall modulate to maintain minimum outside air requirements (based on CO2 readings), and maintain space pressurization.

5. System Stop
   When the air-handling unit stops, the supply and return fan for the air handling unit stops and the normally closed dampers shall close. The cooling coil control valve shall close.

6. Safeties
   A freezestat mounted in the heating coil discharge will stop the air handling unit whenever the air temperature at the freezestat element falls below its set point of 40°F through a hard wired interlock. A critical alarm will sound at the BAS.
   A smoke duct detector mounted in the return and the discharge ductwork of the air handling unit will stop the entire system whenever any of the smoke duct detectors senses particles of combustion. A critical alarm will sound at the BAS.

7. Emergency Stop Button

   A red, industrial oil-tight, mushroom head (2" diameter) push button shall be provided. It shall be mounted in a prominent, readily accessible location. It shall be the maintained contact type.

   When pressed, the emergency stop shall immediately stop all fans and suspend operation of all valves. Spring operated valves shall be spring driven to the design condition.

   Provide status of emergency stop to BAS. Critical alarm on activation.

   Manual reset shall be required to restore operation.

INPUT/OUTPUT SUMMARY: AH-1,2,3,4

Analog Inputs
- Space Temperature
- Space Relative Humidity
- Space CO2 Level
- Space Differential Pressure
- Outside Air Temperature (global point)
- AH Discharge Temperature
- AH Discharge Humidity
- AH Return Air Temperature
- AH Mixed Air Temperature
- AH Mixed Air Humidity
- Cooling Coil Discharge Air Temperature
- Heating Coil Discharge Air Temperature
- Chilled Water Entering Temperature
- Chilled Water Leaving Temperature
- Hot Water Entering Temperature
- Hot Water Leaving Temperature
- Outside Airflow ("Traq")

Analog Outputs
- Chilled Water Coil Control Valve
- Hot Water Coil Control Valve
- Outside Air Damper ("Traq")
- Return Air Damper
- AH Supply Fan Speed (VFD)

Digital Inputs
- Smoke Detector (2)
- Filter Pressure Drop (2)
- Freezestat
- VFD Alarm Status
- Fan Prove (pressure)
- Emergency Stop Status

Digital Outputs
- Unit Supply Fan Start/Stop (VFD)

Note: Dewpoint shall be calculated and displayed for all humidity sensing point, outside the building, inside the building, in the air handlers and in the desiccant units.

POLK STANLEY ROWLAND CURZON PORTER
ARCHITECTS, LTD.

700 SOUTH SCHILLER
LITTLE ROCK, AR 72201
501.378.0878 office
501.372.7629 fax

509 W. SPRING STREET,
SUITE 150
FAYETTEVILLE, AR 72701
479.444.0473 office
473.251.7216 fax

www.polkstanley.com

CONSULTANTS:

CIVIL ENGINEER:
MCCLELLAND ENGINEERS

LANDSCAPE ARCHITECT:
LARSON BURNS SMITH

STRUCTURAL ENGINEER:
CROMWELL ENGINEERS INC.

MECH., ELEC., PLUMB. ENGINEER:
CROMWELL ENGINEERS INC.

GLOBAL VILLAGE CONSULTANT
CAMBRIDGE SEVEN ASSOCIATES

INTERIOR DESIGNER:
POLK STANLEY ROWLAND CURZON PORTER ARCHITECTS

GENERAL CONTRACTOR:
CDI CONTRACTORS, INC.

NOTES:

ISSUE DATE:
17 SEPTEMBER 2007

REVISIONS:

#	DATE:	DESCRIPTION:

MURPHY - KELLER
EDUCATIONAL CENTER

HEIFER
INTERNATIONAL
CENTER

LITTLE ROCK, ARKANSAS

PSRCP JOB NUMBER:
431E

CONTENTS:
MECHANICAL CONTROLS

SHEET NUMBER:
M301

CERTIFICATE OF AUTHORIZATION ARKANSAS - ENGINEERING CROMWELL ENGINEERS #55

STATE OF ARKANSAS REGISTERED PROFESSIONAL ENGINEER No 9409 9/19/07