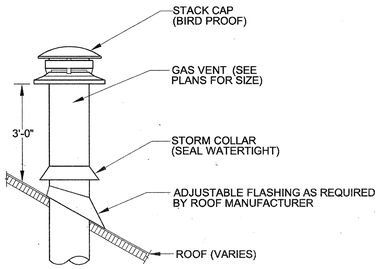

FLUE THRU SLOPED ROOF (A)
SCALE: NO SCALE

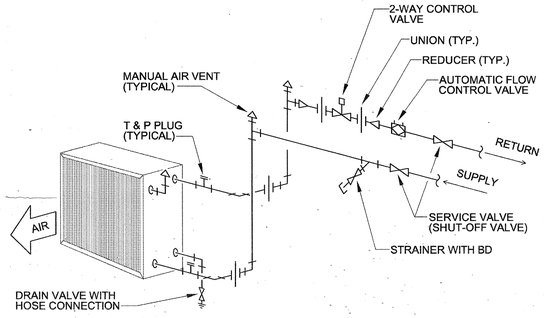

HOT WATER COIL PIPING (B)
SCALE: NO SCALE 2 WAY VALVE

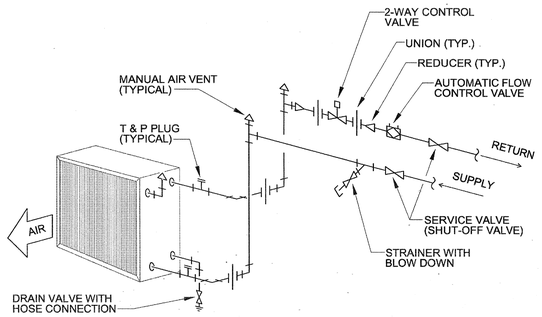

CHILLED WATER COIL PIPING (C)
SCALE: NO SCALE 2 WAY VALVE

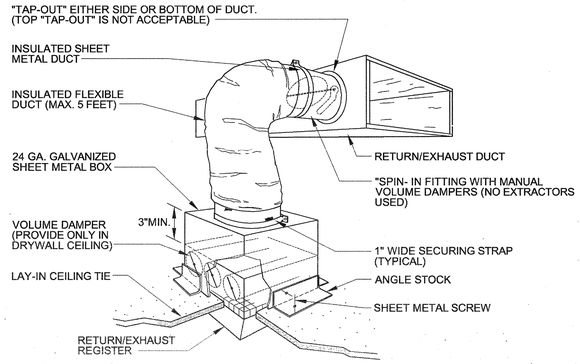

RETURN/EXHAUST GRILLE DUCT CONNECTION (D)
SCALE: NO SCALE

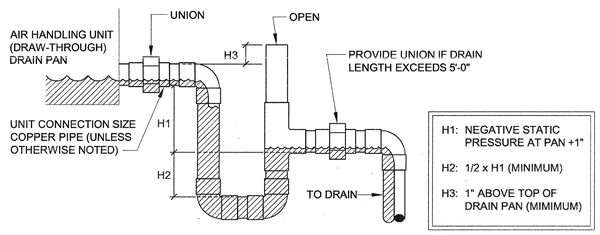

CONDENSATE DRAIN TRAP (E)
SCALE: NO SCALE

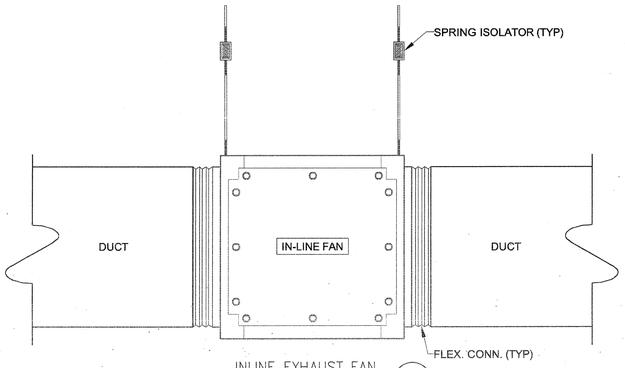

INLINE EXHAUST FAN (F)
SCALE: NO SCALE

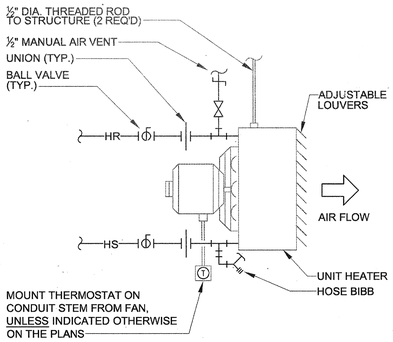

UNIT HEATER – HOT WATER (G)
SCALE: NO SCALE TWO WAY VALVE

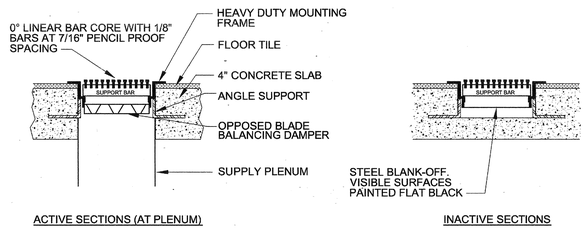

FLOOR GRILLE (H)
SCALE: NO SCALE

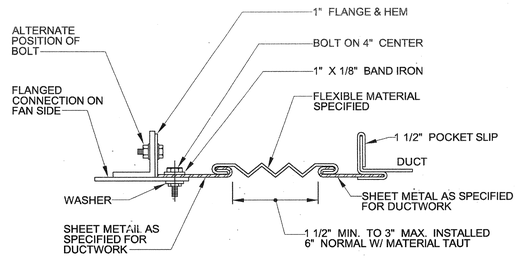

DUCTWORK FLEX CONNECTION (J)
SCALE: NO SCALE

CERTIFICATE OF AUTHORIZATION ARKANSAS ENGINEERS
CROMWELL ENGINEERS #55

STATE OF ARKANSAS
REGISTERED PROFESSIONAL ENGINEER
No. 9417
9/17/07

POLK STANLEY ROWLAND CURZON PORTER
ARCHITECTS, LTD.

700 SOUTH SCHILLER
LITTLE ROCK, AR 72201
501.378.0878 office
501.372.7629 fax

509 W. SPRING STREET,
SUITE 150
FAYETTEVILLE, AR 72701
479.444.0473 office
473.251.7216 fax

www.polkstanley.com

CONSULTANTS:

CIVIL ENGINEER:
MCCLELLAND ENGINEERS

LANDSCAPE ARCHITECT:
LARSON BURNS SMITH

STRUCTURAL ENGINEER:
CROMWELL ENGINEERS INC.

MECH., ELEC., PLUMB. ENGINEER:
CROMWELL ENGINEERS INC.

GLOBAL VILLAGE CONSULTANT
CAMBRIDGE SEVEN ASSOCIATES

INTERIOR DESIGNER:
POLK STANLEY ROWLAND
CURZON PORTER ARCHITECTS

GENERAL CONTRACTOR:
CDI CONTRACTORS, INC.

NOTES:

ISSUE DATE:
17 SEPTEMBER 2007

REVISIONS:

#	DATE:	DESCRIPTION:

MURPHY - KELLER
EDUCATIONAL CENTER

HEIFER
INTERNATIONAL
CENTER

LITTLE ROCK, ARKANSAS

PSRCP JOB NUMBER:
431E

CONTENTS:
MECHANICAL DETAILS

SHEET NUMBER:
M203