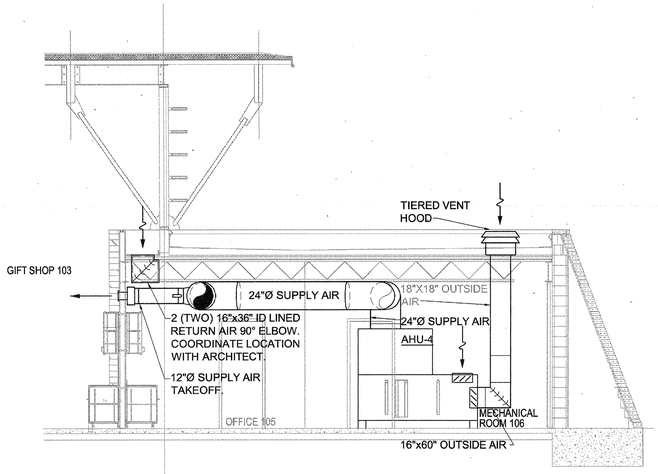


MECHANICAL SECTION THRU MECH ROOM (6)
SCALE: 1/4"=1'-0"

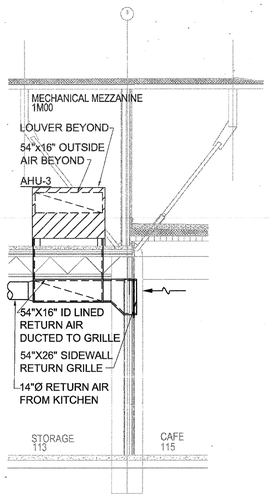


MECHANICAL SECTION THRU MEZZANINE (5)
SCALE: 1/4"=1'-0"

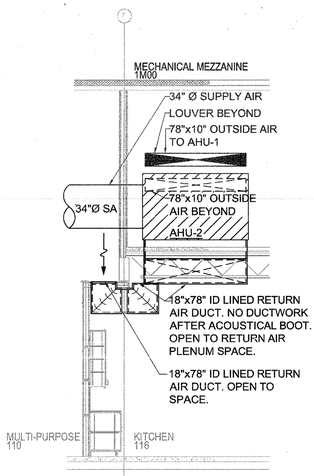


MECHANICAL SECTION THRU MEZZANINE (4)
SCALE: 1/4"=1'-0"

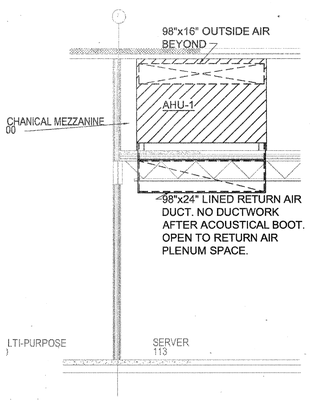


MECHANICAL SECTION THRU MEZZANINE (3)
SCALE: 1/4"=1'-0"

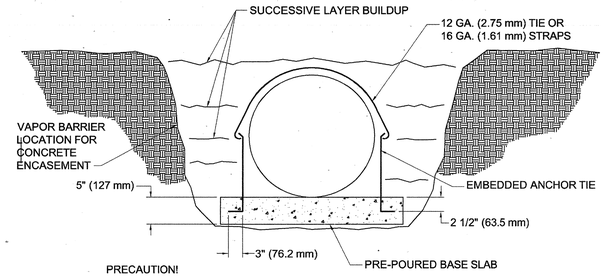


PRECAUTION!

THREE STAGE PLACEMENT OF CONCRETE IS ADVISABLE TO AVOID DAMAGE AND REDUCE DANGER OF FLOTATION. CONCRETE SHOULD NEVER BE DUMPED ON THE DUCT; COVER SHOULD BE MOVED LATERALLY OVER THE DUCT.

CONCRETE ENCASED UNDERGROUND DUCTWORK (A)
SCALE: NO SCALE

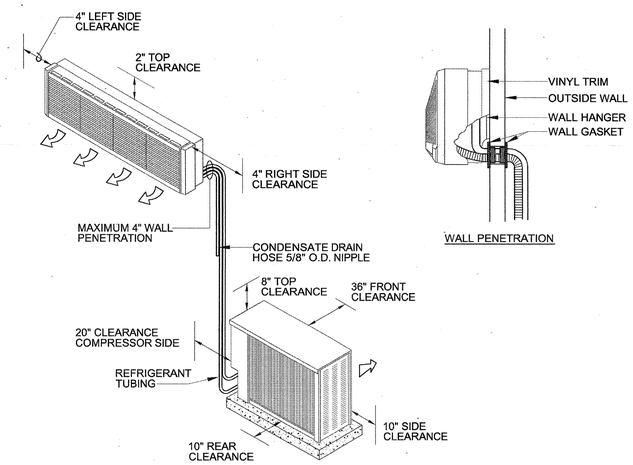


SPLIT SYSTEM A/C CONDITIONING UNIT (DUCTLESS) (B)
SCALE: NO SCALE

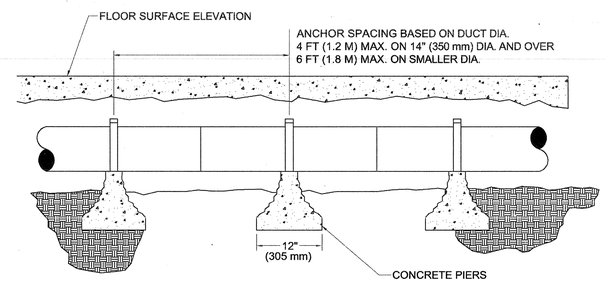


TYPICAL ANCHORAGE OF DUCTS TO BE ENCASED IN CONCRETE

CONCRETE ENCASED UNDERGROUND DUCTWORK (C)
SCALE: NO SCALE

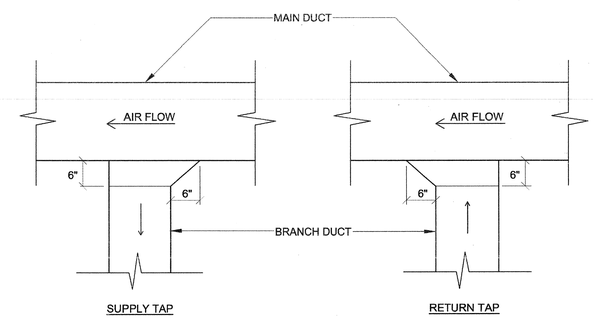


DUCT TAP CONNECTIONS (D)
SCALE: NO SCALE

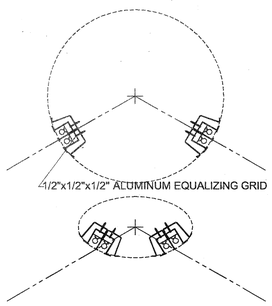


STANDARD SLECTIONS: ML-38 ONLY
1 SLOT DUCT DIAMETERS: 10, 14, 18, 22, 24"
2 SLOT DUCT DIAMETERS: 12, 14, 18, 22, 24"
3 SLOT DUCT DIAMETERS: 14, 16, 18, 20, 22, 24, 26, 30"
4 SLOT DUCT DIAMETERS: 18, 20, 22, 24, 26, 28, 30, 32"

EXPOSED DUCT DETAIL (E)
SCALE: NO SCALE

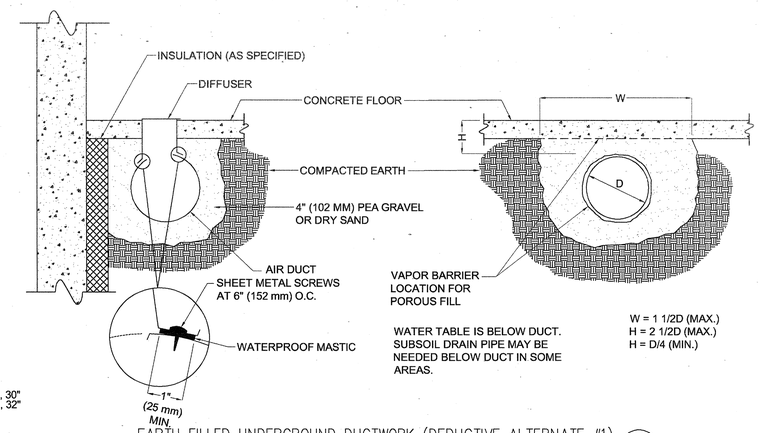


WATER TABLE IS BELOW DUCT. SUBSOIL DRAIN PIPE MAY BE NEEDED BELOW DUCT IN SOME AREAS.

W = 1 1/2D (MAX.)
H = 2 1/2D (MAX.)
H = D/4 (MIN.)

EARTH FILLED UNDERGROUND DUCTWORK (DEDUCTIVE ALTERNATE #1) (F)
SCALE: NO SCALE

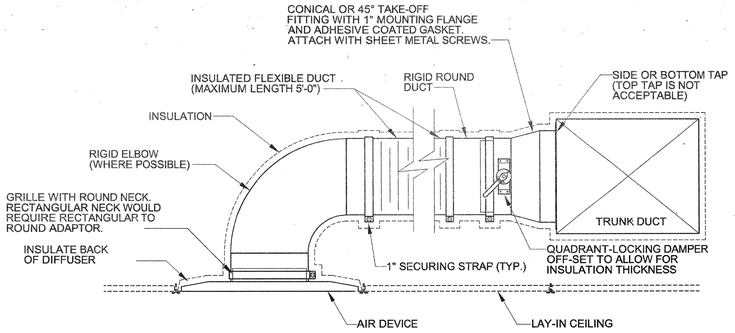


FLEX SHALL BE RUN AS STRAIGHT AS POSSIBLE AND CUT TO MINIMUM LENGTH. SWEEPING BENDS TO ACCOMMODATE EXCESS LENGTH ARE NOT ALLOWED.

ROUND TAKE-OFF SUPPLY DUCT CONNECTION (G)
SCALE: NO SCALE


POLK STANLEY ROWLAND CURZON PORTER
ARCHITECTS, LTD.

700 SOUTH SCHILLER
LITTLE ROCK, AR 72201
501.378.0878 office
501.372.7629 fax

509 W. SPRING STREET,
SUITE 150
FAYETTEVILLE, AR 72701
479.444.0473 office
473.251.7216 fax

www.polkstanley.com


**CONSULTANTS:**

**CIVIL ENGINEER:**
MCCLELLAND ENGINEERS

**LANDSCAPE ARCHITECT:**
LARSON BURNS SMITH

**STRUCTURAL ENGINEER:**
CROMWELL ENGINEERS INC.

**MECH., ELEC., PLUMB. ENGINEER:**
CROMWELL ENGINEERS INC.

**GLOBAL VILLAGE CONSULTANT**
CAMBRIDGE SEVEN ASSOCIATES

**INTERIOR DESIGNER:**
POLK STANLEY ROWLAND CURZON PORTER ARCHITECTS

**GENERAL CONTRACTOR:**
CDI CONTRACTORS, INC.

**NOTES:**

**ISSUE DATE:**
17 SEPTEMBER 2007

**REVISIONS:**

| # | DATE: | DESCRIPTION: |
|---|---|---|
| | | |
| | | |
| | | |
| | | |
| | | |
| | | |

MURPHY - KELLER
EDUCATIONAL CENTER

HEIFER INTERNATIONAL CENTER

**LITTLE ROCK, ARKANSAS**

**PSRCP JOB NUMBER:**
431E

**CONTENTS:**
MECHANICAL DETAILS

**SHEET NUMBER:**
M202

CERTIFICATE OF AUTHORIZATION
CROMWELL ENGINEERS #65
ARKANSAS - ENGINEERING

STATE OF ARKANSAS
REGISTERED PROFESSIONAL ENGINEER
No. 9400
9-17-07