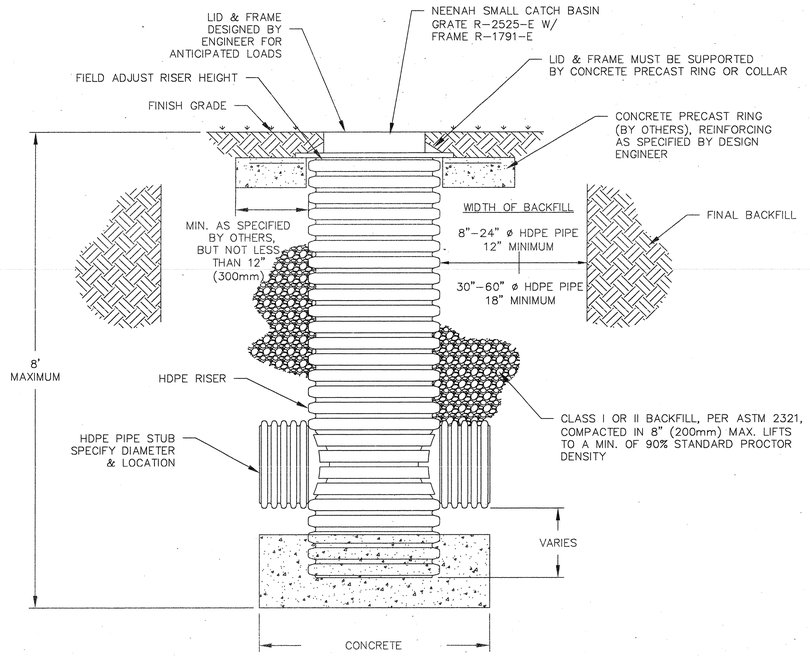

ADS CATCH BASIN

SECTION SCALE: NTS

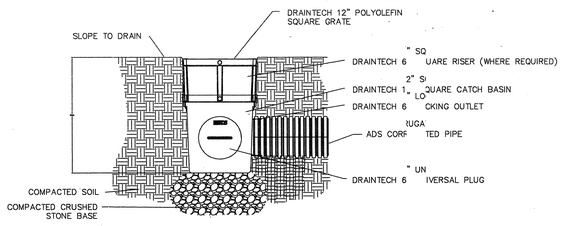

NOTES:
1. MAX. COVER OVER TOP OF PIPE IS 4FT. CONTACT ADS IF OTHERWISE GREATER.
2. GRATE OR LID MUST BE INSTALLED PRIOR TO POURING CONCRETE OR BACKFILLING

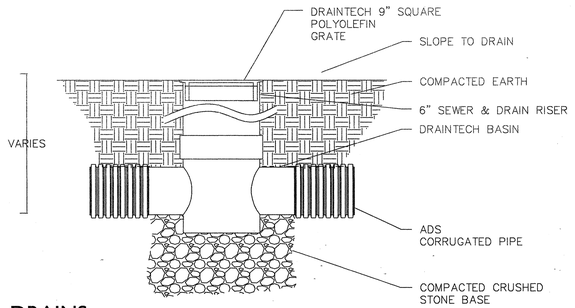

ADS AREA DRAINS

SECTION SCALE: NTS

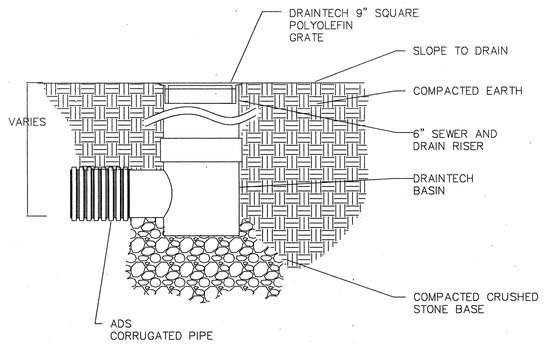

1 LANDSCAPE DRAIN DETAILS

ELEVATION SCALE: 3/8"=1'-0"

POLK STANLEY ROWLAND CURZON PORTER
ARCHITECTS, LTD.

700 SOUTH SCHILLER
LITTLE ROCK, AR 72201
501.378.0878 office
501.372.7629 fax

509W. SPRING STREET, SUITE 150
FAYETTEVILLE, AR 72701
479.444.0473 office
479.251.7216 fax

www.polkstanley.com

CONSULTANTS:

CIVIL ENGINEER:
McCLELLAND CONSULTING ENGINEERS INC.

LANDSCAPE ARCHITECT:
LARSON BURNS AND SMITH, INC.

STRUCTURAL ENGINEER:
CROMWELL ENGINEERS INC.

MECH., ELEC., PLUMB. ENGINEER:
CROMWELL ENGINEERS INC.

GLOBAL VILLAGE CONSULTANT:
CAMBRIDGE SEVEN ASSOCIATES

INTERIOR DESIGNER:
POLK STANLEY ROWLAND CURZON PORTER ARCHITECTS

GENERAL CONTRACTOR:
CDI CONTRACTORS, INC.

NOTES:

REGISTERED LANDSCAPE ARCHITECT
MARTIN L. SMITH
NO. 237
ARKANSAS
9/17/07

ISSUE DATE:
17 SEPTEMBER 2007

REVISIONS:

#	DATE	DESCRIPTION

MURPHY KELLER EDUCATION CENTER

HEIFER INTERNATIONAL CENTER

LITTLE ROCK, ARKANSAS

PSRCP JOB NUMBER:
431E

CONTENTS:
SITEWORK DETAILS

SHEET NUMBER:
L105