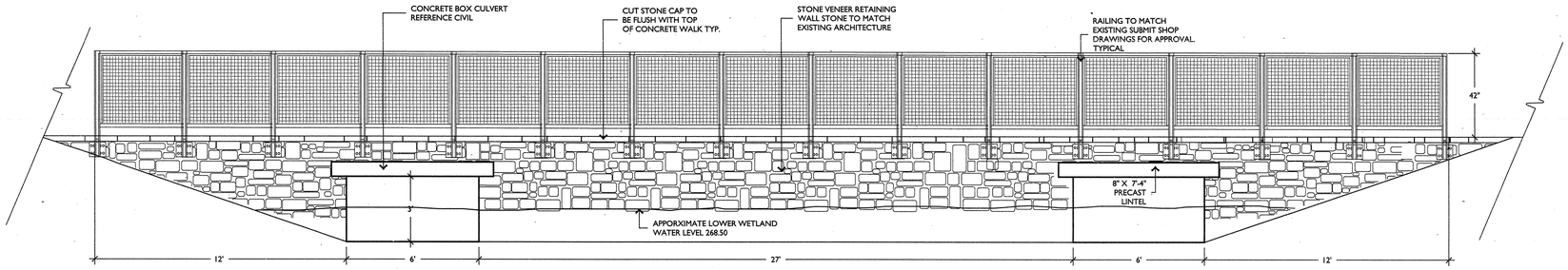

1 THIRD STREET EXTENSION SOUTH ELEVATION OF RETAINING WALL/RAILING AND CONCRETE BOX CULVERTS

ELEVATION — SCALE: 3/8"=1'-0"

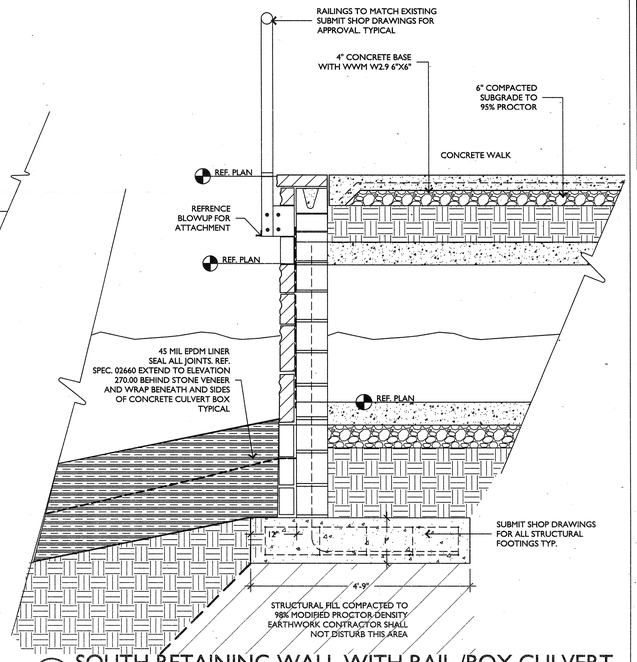

2 SOUTH RETAINING WALL WITH RAIL /BOX CULVERT

SECTION — SCALE: 3/4"=1'-0"

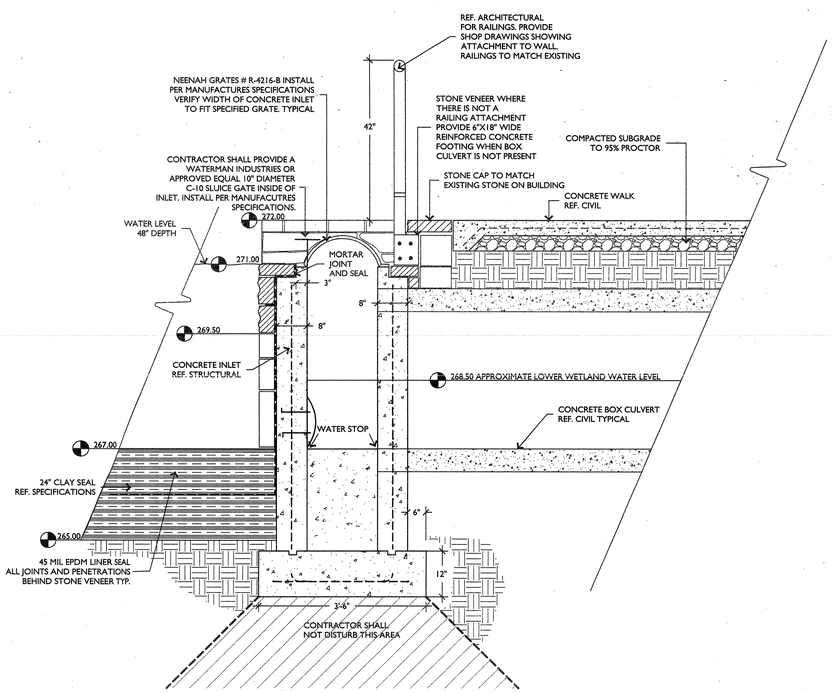

3 NORTH THIRD STREET WETLAND INLET/RAILING AND BOX CULVERT

SECTION — SCALE: 3/4"=1'-0"

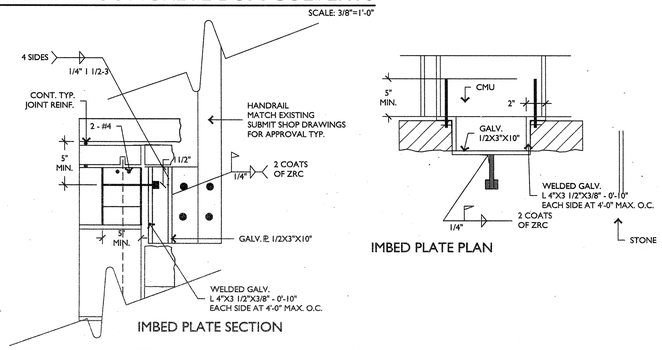

RAILING ATTACHMENT DETAILS

PLAN/SECTION — SCALE: NTS

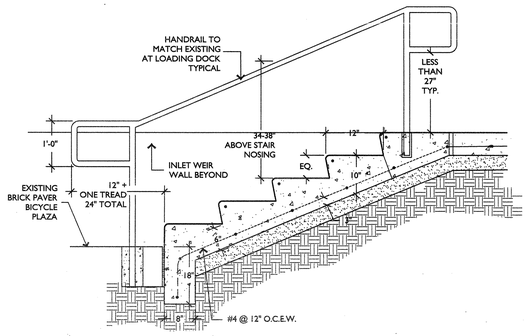

7 CONCRETE STEPS WITH HANDRAIL

SECTION — SCALE: NTS

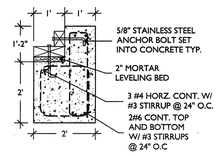

CONCRETE BOARDWALK ABUTMENT

SECTION — SCALE: NTS

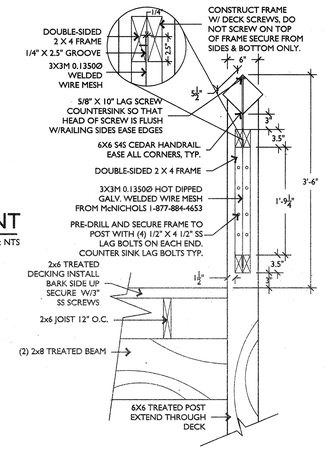

3 NORTH WETLAND SECTION AND BOARDWALK DETAILS

ELEVATION — SCALE: 1/2"=1'-0"

SPECIFICATIONS:

1. THE CRUSHED BRICK SHALL MEET THE FOLLOWING GRADATION:
   RETAINED ON A 5/8" SIEVE – 0%
   RETAINED ON A 3/8" SIEVE – 15% TO 25%
   RETAINED ON A #4 SIEVE – 40 % TO 55%
   RETAINED ON A #10 SIEVE – 20 % TO 35%
2. THE SUBBASE MATERIAL SHALL BE 4" ROAD BASE

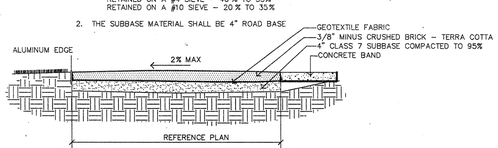

5 CRUSHED BRICK ON BASE

SECTION — SCALE: NTS

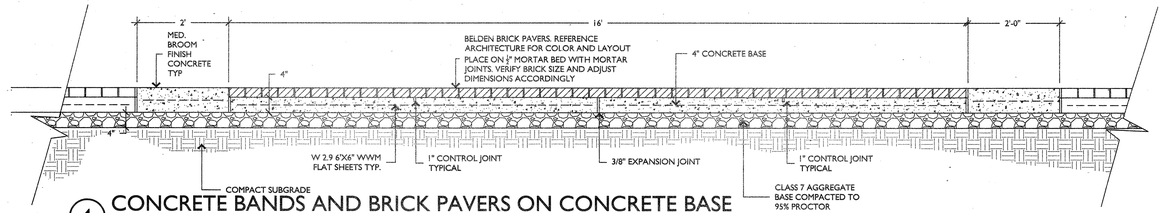

4 CONCRETE BANDS AND BRICK PAVERS ON CONCRETE BASE

SECTION — SCALE: NTS

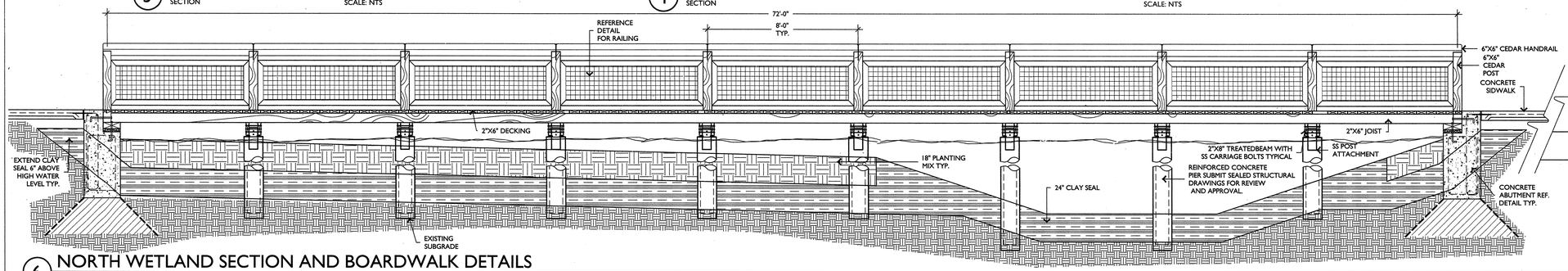

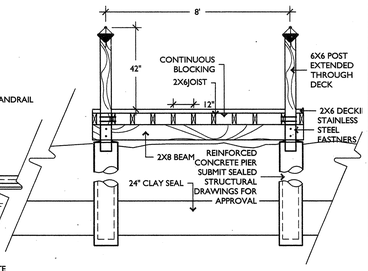

POLK STANLEY ROWLAND CURZON PORTER
ARCHITECTS, LTD.

700 SOUTH SCHILLER
LITTLE ROCK, AR 72201
501.378.0878 office
501.372.7629 fax

509W. SPRING STREET, SUITE 150
FAYETTEVILLE, AR 72701
479.444.0473 office
479.251.7216 fax

www.polkstanley.com

CONSULTANTS:

CIVIL ENGINEER:
McCLELLAND CONSULTING ENGINEERS INC.

LANDSCAPE ARCHITECT:
LARSON BURNS AND SMITH, INC.

STRUCTURAL ENGINEER:
CROMWELL ENGINEERS INC.

MECH., ELEC., PLUMB. ENGINEER:
CROMWELL ENGINEERS INC.

GLOBAL VILLAGE CONSULTANT:
CAMBRIDGE SEVEN ASSOCIATES

INTERIOR DESIGNER:
POLK STANLEY ROWLAND CURZON PORTER ARCHITECTS

GENERAL CONTRACTOR:
CDI CONTRACTORS, INC.

NOTES:

REGISTERED LANDSCAPE ARCHITECT MARTIN L. SMITH NO. 237 ARKANSAS 9/17/07

ISSUE DATE:
17 SEPTEMBER 2007

REVISIONS:

#	DATE	DESCRIPTION

MURPHY KELLER EDUCATION CENTER

HEIFER INTERNATIONAL CENTER

LITTLE ROCK, ARKANSAS

PSRCP JOB NUMBER:
431E

CONTENTS:
SITEWORK DETAILS

SHEET NUMBER:
L104