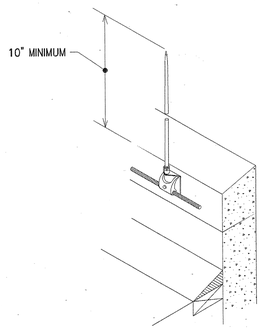

PARAPET DETAIL - LIGHTNING PROTECTION (1)
NOT TO SCALE

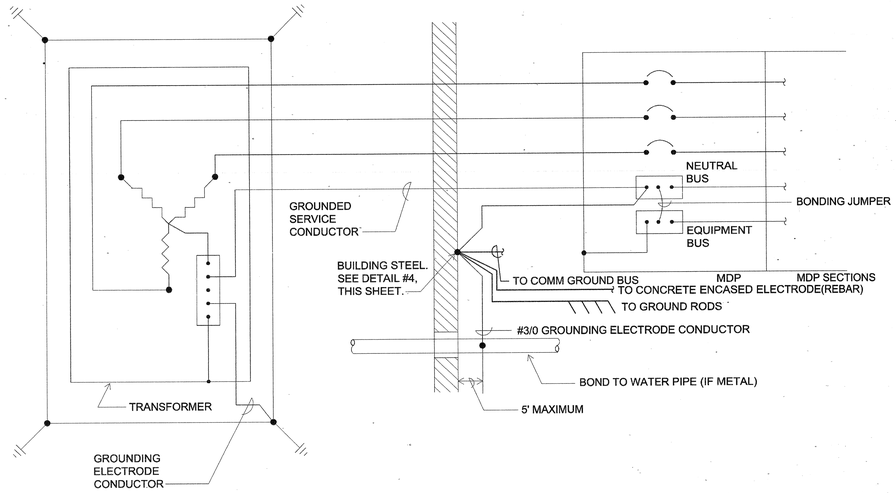

PRIMARY SERVICE GROUNDING (2)
NOT TO SCALE

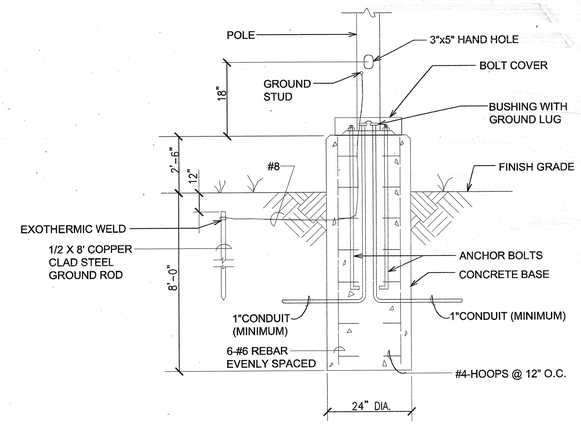

LIGHTING POLE BASE (3)
NOT TO SCALE

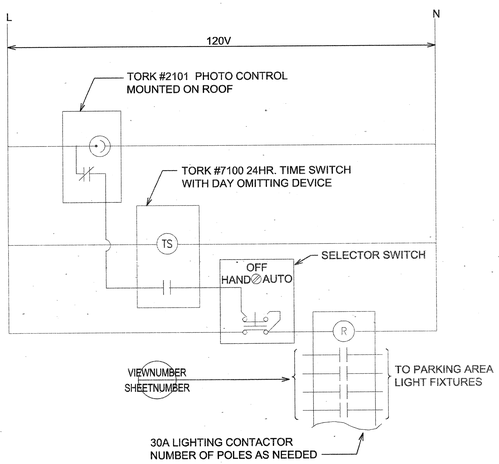

TIME SWITCH SCHEMATIC DIAGRAM (4)
NOT TO SCALE

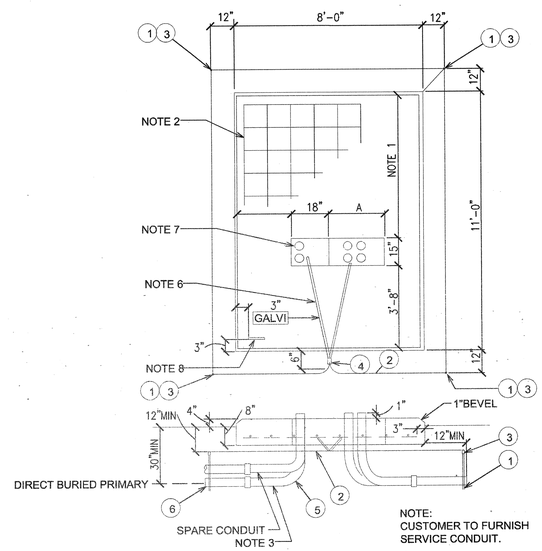

THREE PHASE TRANSORMER PAD (5)
NOT TO SCALE

TRANSFORMER KV	DIM A	DIM B	DIM C
12.4,13.2,13.8	20"	8'-0"	2'-6"

TANSFORMER KVA	PRIMARY CONDUCTOR SIZE	CONDUIT SIZE
150-1500	NO.2 ALUM	4"
2000-2500	NO.4/0 ALUM	4"

ITEM	DESCRIPTION	QUANTITY
1	ROD, GROUND,5/8 " X 8'-0"	4
2	CONDUCTOR, COPPER #2 BARE	REQ'D
3	CLAMP, GROUND ROD	4
4	CONNECTOR, COMPRESSION #2 COPPER	1
5	CONDUIT, 90 BEND, PVC PLASTIC	REQ'D
6	CONDUIT, PVC PLASTIC	REQ'D

NOTES:

1. WHERE POSSIBLE DO NOT PLACE CONDUIT UNDER THIS SECTION OF FOUNDATION.
2. REINFORCING - #4 BARS 12" C.C. BOTH WAYS.
3. WHEN INSTALLING CONDUIT DISTURB GROUND IN FOUNDATION AREA AS LITTLE AS POSSIBLE. EXTEND CONDUIT 1" ABOVE FOUNDATION.
4. TOP OF FOUNDATION TO BE SMOOTH AND LEVEL. FINAL GRADE SHALL SLOPE AWAY FROM PAD.
5. CONCRETE SHALL BE 3500 PSI AT 28 DAYS.
6. CONTRACTOR TO FURNISH 1" CONDUIT UNDER PAD FOR GROUND WIRE.
7. LOCATE CONDUITS UNDER PRIMARY & SECONDARY BUSHINGS.
8. TRANSFORMER LOCATION TAG SHALL BE ATTACHED TO PAD WITH CONCRETE NAILS OR SHEET METAL SCREWS.

POLK STANLEY ROWLAND CURZON PORTER
ARCHITECTS, LTD.

700 SOUTH SCHILLER
LITTLE ROCK, AR 72201
501.378.0878 office
501.372.7629 fax

509 W. SPRING STREET,
SUITE 150
FAYETTEVILLE, AR 72701
479.444.0473 office
473.251.7216 fax

www.polkstanley.com

CONSULTANTS:

CIVIL ENGINEER:
MCCLELLAND ENGINEERS

LANDSCAPE ARCHITECT:
LARSON BURNS SMITH

STRUCTURAL ENGINEER:
CROMWELL ENGINEERS INC.

MECH., ELEC., PLUMB. ENGINEER:
CROMWELL ENGINEERS INC.

GLOBAL VILLAGE CONSULTANT
CAMBRIDGE SEVEN ASSOCIATES

INTERIOR DESIGNER:
POLK STANLEY ROWLAND CURZON PORTER ARCHITECTS

GENERAL CONTRACTOR:
CDI CONTRACTORS, INC.

NOTES:

ISSUE DATE:
17 SEPTEMBER 2007

REVISIONS:

#	DATE:	DESCRIPTION:

MURPHY - KELLER
EDUCATIONAL CENTER

HEIFER INTERNATIONAL CENTER

LITTLE ROCK, ARKANSAS

PSRCP JOB NUMBER:
431E

CONTENTS:
ELECTRICAL DETAILS

SHEET NUMBER:
E501

CERTIFICATE OF AUTHORIZATION
CROMWELL ENGINEERS
#55
ARKANSAS ENGINEERS INC.

STATE OF ARKANSAS
REGISTERED PROFESSIONAL ENGINEER
No. 5401
PAMELA S. FULGHUM
09/17/07