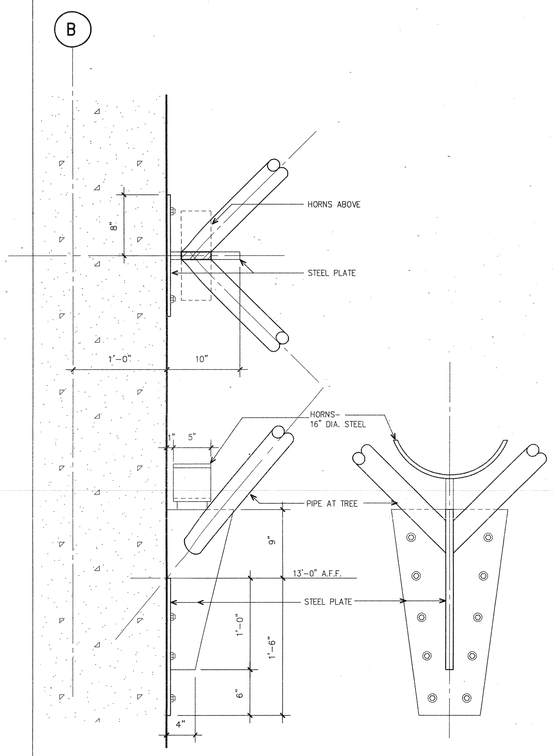

TREE BASE AT GL B CONC. WALL (13)
SCALE: 1 1/2"=1'-0"

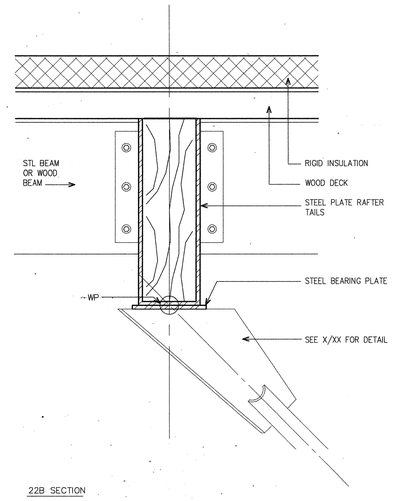

22B SECTION

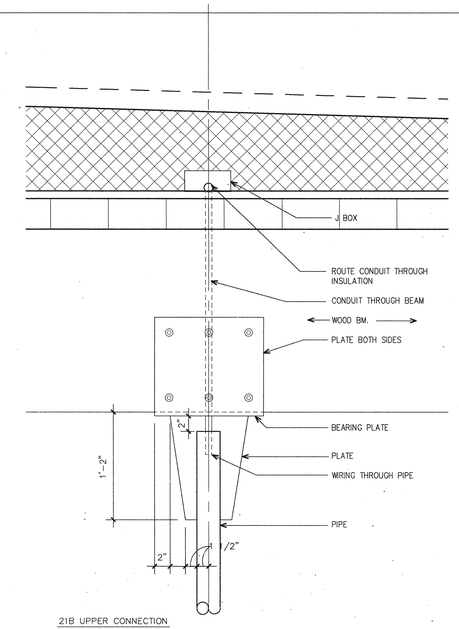

21B UPPER CONNECTION

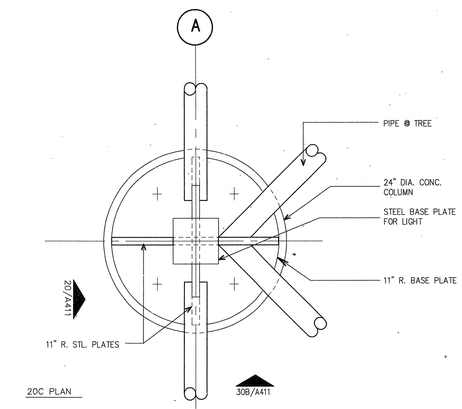

20C PLAN

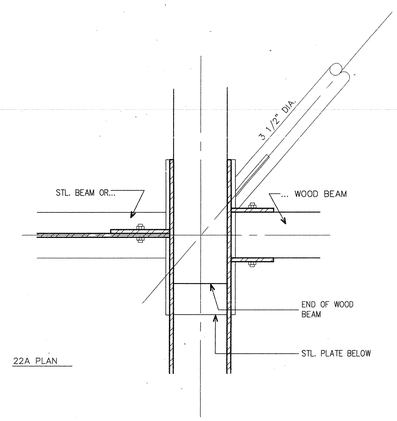

22A PLAN

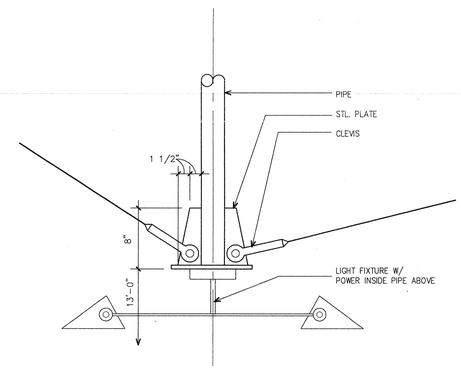

21A LOWER CONNECTION

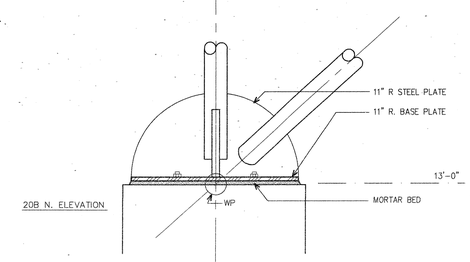

20B N. ELEVATION

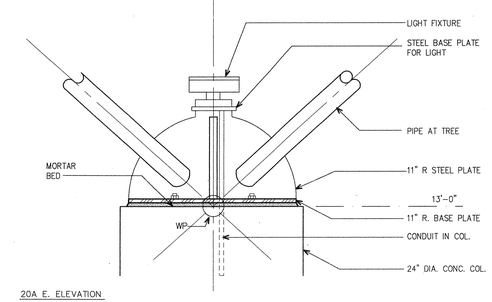

20A E. ELEVATION

TRUSS DETAIL (21)
SCALE: 1 1/2"=1'-0"

ELEVATION– COLUMN CAP @ GL–A (20)
SCALE: 1 1/2"=1'-0"

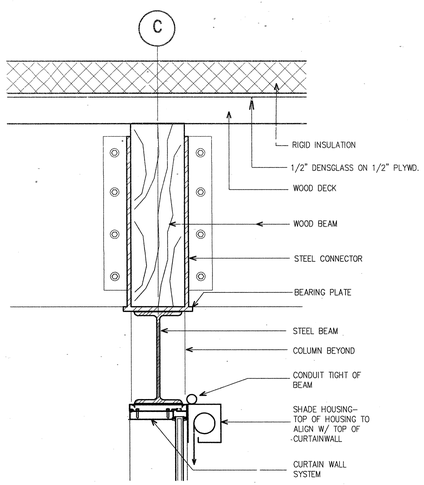

EAST WALL CONNECTION DETAIL (13)
SCALE: 1 1/2"=1'-0"

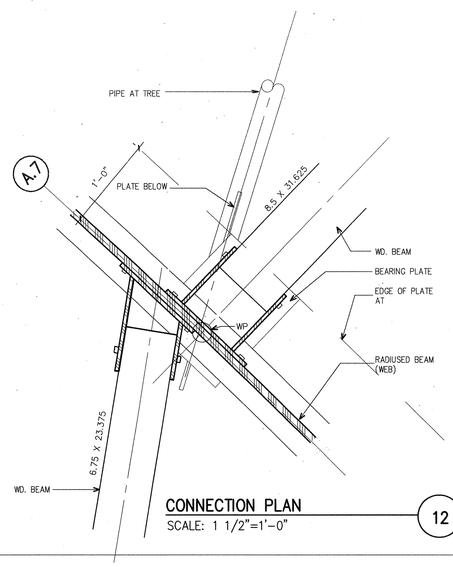

CONNECTION PLAN (12)
SCALE: 1 1/2"=1'-0"

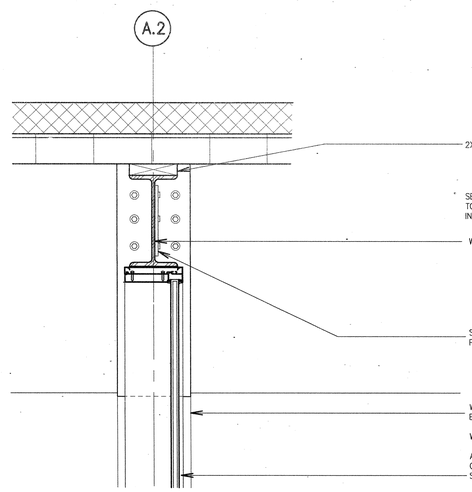

ROOF DETAIL– WEST WALL @ STL. BEAM (11)
SCALE: 1 1/2"=1'-0"

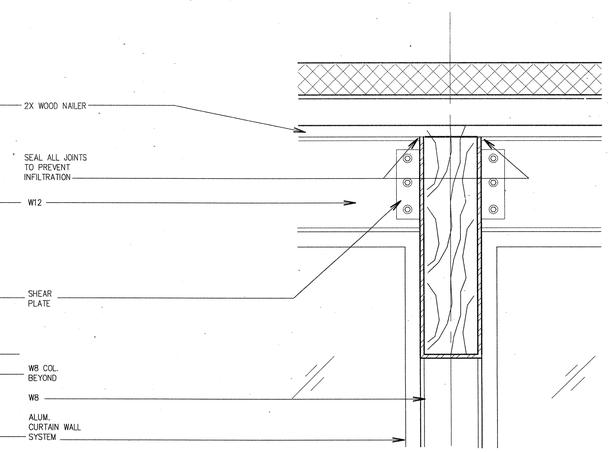

ROOF DETAIL– WEST WALL @ WD. BEAM (10)
SCALE: 1 1/2"=1'-0"

POLK STANLEY ROWLAND CURZON PORTER
ARCHITECTS, LTD.

700 SOUTH SCHILLER
LITTLE ROCK, AR 72201
501.378.0878 office
501.372.7629 fax

509 W. SPRING STREET, SUITE 150
FAYETTEVILLE, AR 72701
479.444.0473 office
473.251.7216 fax

www.polkstanley.com

POLK STANLEY ROWLAND CURZON PORTER ARCHITECTS LTD. 9/17/07

CONSULTANTS:

CIVIL ENGINEER:
MCCLELLAND ENGINEERS

LANDSCAPE ARCHITECT:
LARSON BURNS SMITH

STRUCTURAL ENGINEER:
CROMWELL ENGINEERS INC.

MECH., ELEC., PLUMB. ENGINEER:
CROMWELL ENGINEERS INC.

GLOBAL VILLAGE CONSULTANT
CAMBRIDGE SEVEN ASSOCIATES

INTERIOR DESIGNER:
POLK STANLEY ROWLAND CURZON PORTER ARCHITECTS

GENERAL CONTRACTOR:
CDI CONTRACTORS, INC.

NOTES:

ISSUE DATE:
17 SEPTEMBER 07

REVISIONS:

#	DATE:	DESCRIPTION:

MURPHY KELLER EDUCATION CENTER

HEIFER INTERNATIONAL CENTER
LITTLE ROCK, ARKANSAS

PSRCP JOB NUMBER:
431E

CONTENTS:
STEEL CONNECTION DETAILS

SHEET NUMBER:
A411

Monday, September 17, 2007