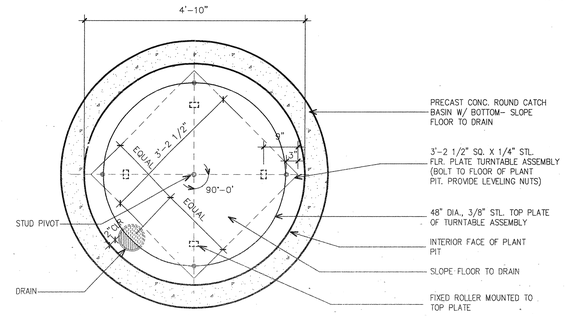

A TURNTABLE PLAN

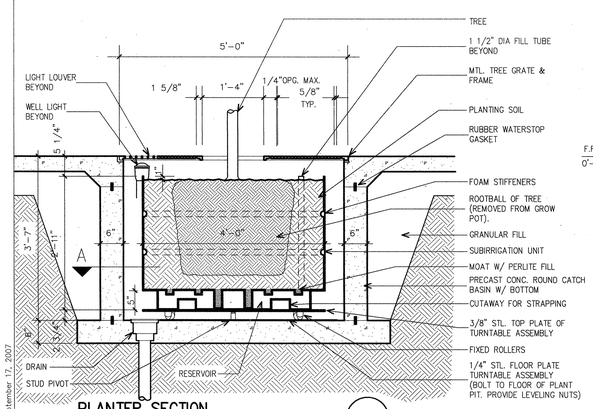

PLANTER SECTION 13
SCALE: 3/4"=1'-0"

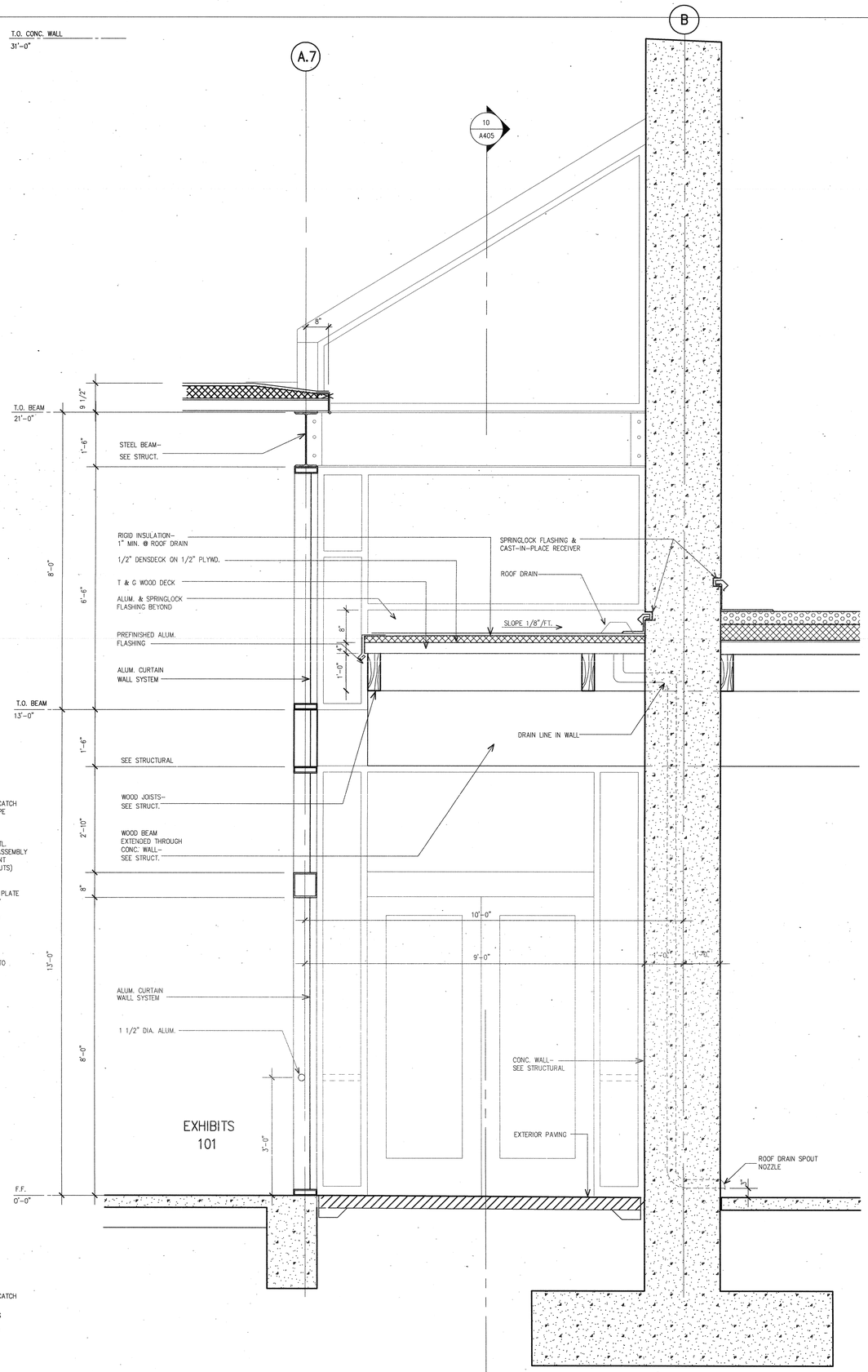

WALL SECTION 12
SCALE: 3/4"=1'-0"

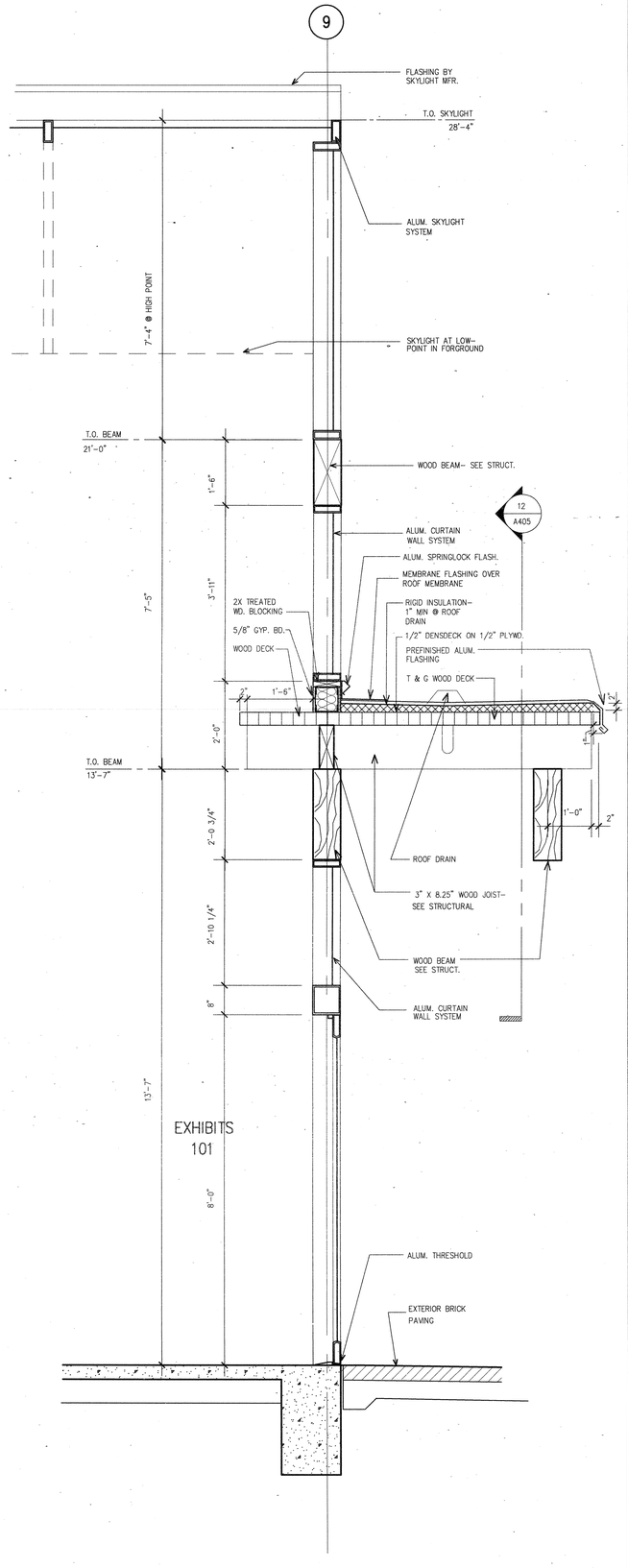

WALL SECTION 10
SCALE: 3/4"=1'-0"

POLK STANLEY ROWLAND CURZON PORTER
ARCHITECTS, LTD.

700 SOUTH SCHILLER
LITTLE ROCK, AR 72201
501.378.0878 office
501.372.7629 fax

509 W. SPRING STREET, SUITE 150
FAYETTEVILLE, AR 72701
479.444.0473 office
473.251.7216 fax

www.polkstanley.com

POLK STANLEY ROWLAND CURZON PORTER ARCHITECTS, LTD. REGISTERED ARCHITECTS C-1300 9/17/07

CONSULTANTS:

CIVIL ENGINEER:
MCCLELLAND ENGINEERS

LANDSCAPE ARCHITECT:
LARSON BURNS SMITH

STRUCTURAL ENGINEER:
CROMWELL ENGINEERS INC.

MECH., ELEC., PLUMB. ENGINEER:
CROMWELL ENGINEERS INC.

GLOBAL VILLAGE CONSULTANT
CAMBRIDGE SEVEN ASSOCIATES

INTERIOR DESIGNER:
POLK STANLEY ROWLAND CURZON PORTER ARCHITECTS

GENERAL CONTRACTOR:
CDI CONTRACTORS, INC.

NOTES:

ISSUE DATE:
17 SEPTEMBER 07

REVISIONS:

#	DATE:	DESCRIPTION:

MURPHY KELLER EDUCATION CENTER

HEIFER INTERNATIONAL CENTER

LITTLE ROCK, ARKANSAS

PSRCP JOB NUMBER:
431E

CONTENTS:
WALL SECTIONS

SHEET NUMBER:
A405

Monday, September 17, 2007