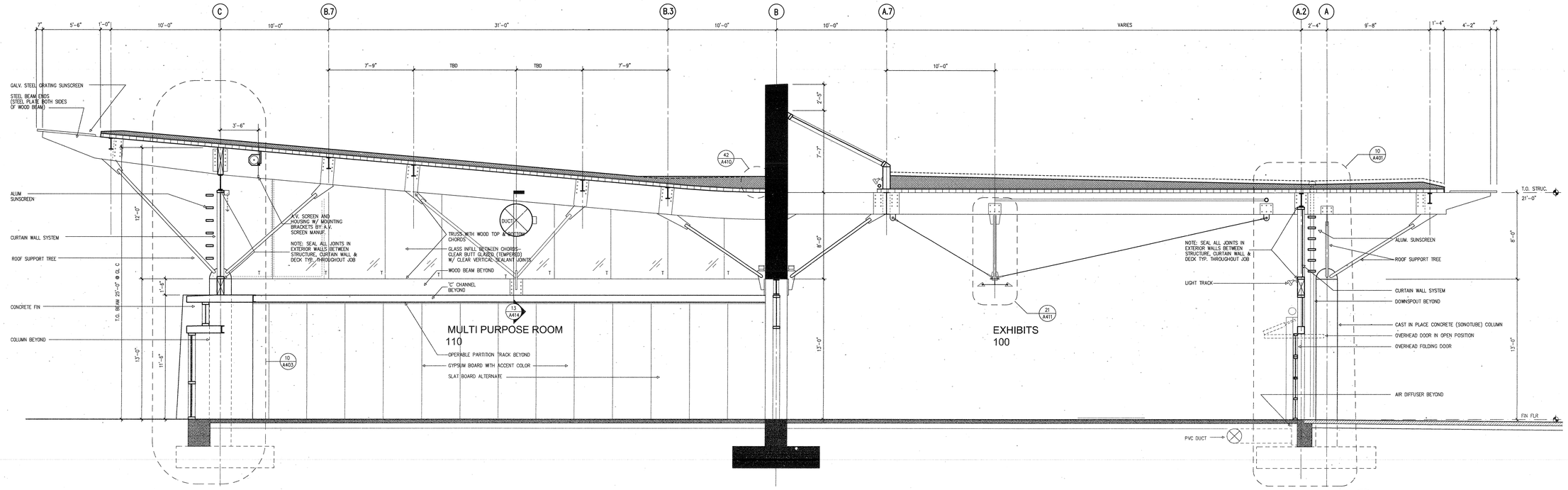

BUILDING SECTION 20

SCALE: 1/4"=1'-0"

SEE 10/A301 FOR MORE INFORMATION

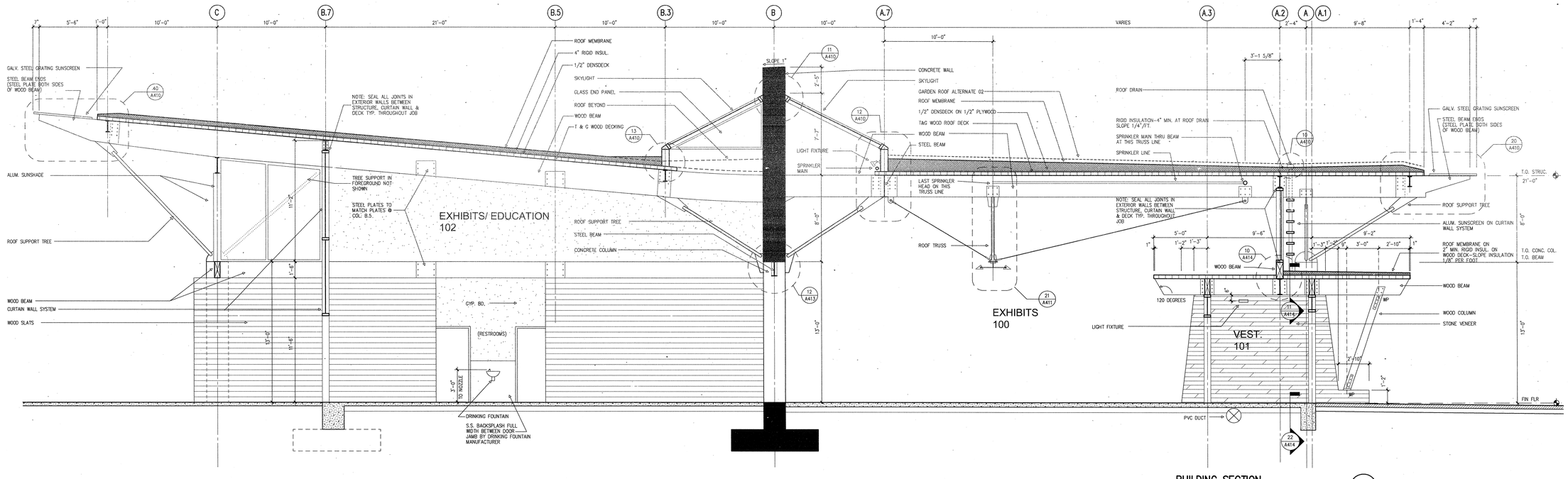

BUILDING SECTION 10

SCALE: 1/4"=1'-0"

Monday, September 17, 2007 10:40 AM

POLK STANLEY ROWLAND CURZON PORTER
ARCHITECTS, LTD

700 SOUTH SCHILLER
LITTLE ROCK, AR 72201
501.378.0878 office
501.372.7629 fax

509 W. SPRING STREET, SUITE 150
FAYETTEVILLE, AR 72701
479.444.0473 office
473.251.7216 fax

www.polkstanley.com

CONSULTANTS:

CIVIL ENGINEER:
MCCLELLAND ENGINEERS

LANDSCAPE ARCHITECT:
LARSON BURNS SMITH

STRUCTURAL ENGINEER:
CROMWELL ENGINEERS INC.

MECH., ELEC., PLUMB. ENGINEER
CROMWELL ENGINEERS INC.

GLOBAL VILLAGE CONSULTANT
CAMBRIDGE SEVEN ASSOCIATES

INTERIOR DESIGNER:
POLK STANLEY ROWLAND CURZON PORTER ARCHITECTS

GENERAL CONTRACTOR:
CDI CONTRACTORS, INC.

NOTES:

ISSUE DATE:
17 SEPTEMBER 07

REVISIONS:

#	DATE:	DESCRIPTION:

MURPHY KELLER EDUCATION CENTER

HEIFER INTERNATIONAL CENTER

LITTLE ROCK, ARKANSAS

PSRCP JOB NUMBER:
431E

CONTENTS:
BUILDING SECTIONS

SHEET NUMBER:
A301