FRAMED BEAM CONNECTION DETAIL

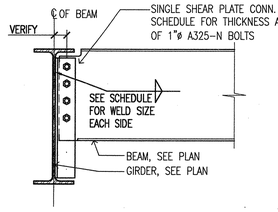

FRAMED BEAM BOLT SCHEDULE

MIN. BEAM SIZE	MAX. NUMBER OF BOLTS IN ONE VERTICAL ROW	MINIMUM PLATE THICKNESS	MINIMUM FILLET WELD SIZE	CAPACITY
W27 & W24	7	3/8"	5/16"	107k
W21	6	5/16"	1/4"	91.8k
W18 & C18	5	5/16"	1/4"	76.5k
W16	4	5/16"	1/4"	61.2k
W14,W12,C12	3	5/16"	1/4"	45.9k
W10,W8&C8	2	5/16"	1/4"	24.9k

*NOTES:

1. CAPACITY IN SCHEDULE BASED ON LRFD DESIGN WITH FACTORED LOADS AND STANDARD OR SHORT HORIZONTAL SLOTTED HOLES. OVERSIZE OR VERTICAL SLOTTED HOLES ARE NOT ALLOWED.
2. NUMBER OF BOLTS SHOWN IS THE MINIMUM REQUIRED FOR CONNECTIONS WITHOUT AXIAL LOADS WHERE A LARGER REACTION IS SHOWN ON THE DRAWING, USE LARGER A-325N BOLTS (1⅛"ø BOLTS ARE NOT ALLOWED).
3. PLATE EDGE DISTANCE 1½" TYPICAL.
4. PREHEAT WELDS AS REQUIRED BY AISC.

1 TYPICAL BEAM TO GIRDER CONNECTION SCHEDULE

NOT TO SCALE

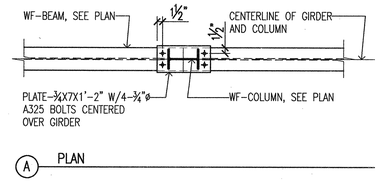

A PLAN

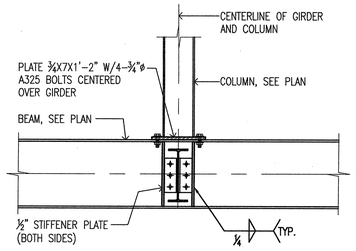

B ELEVATION

2 TYPICAL STUB COLUMN BEARING ON BEAM

SCALE: ¾" = 1'-0"

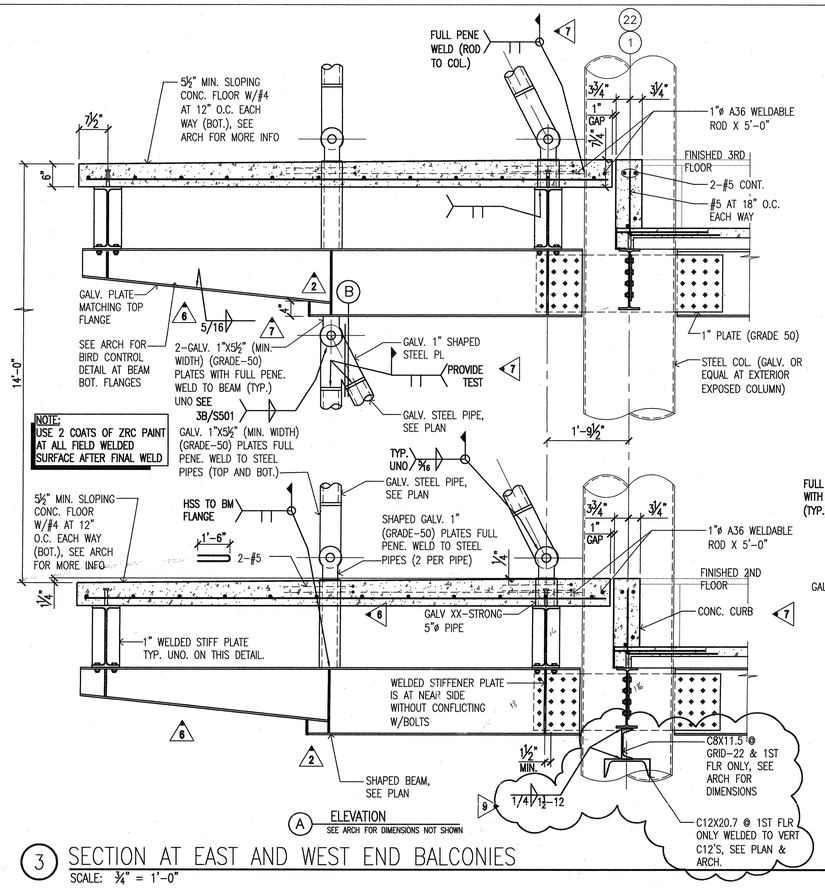

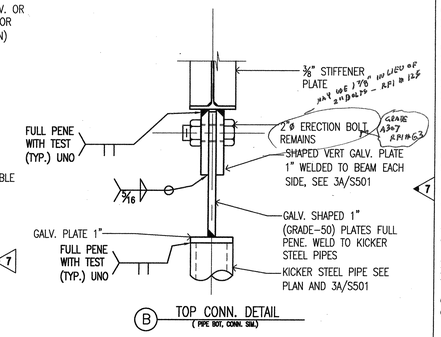

B TOP CONN. DETAIL
(PIPE BOT. CONN. SIM.)

3 SECTION AT EAST AND WEST END BALCONIES

SCALE: ¾" = 1'-0"

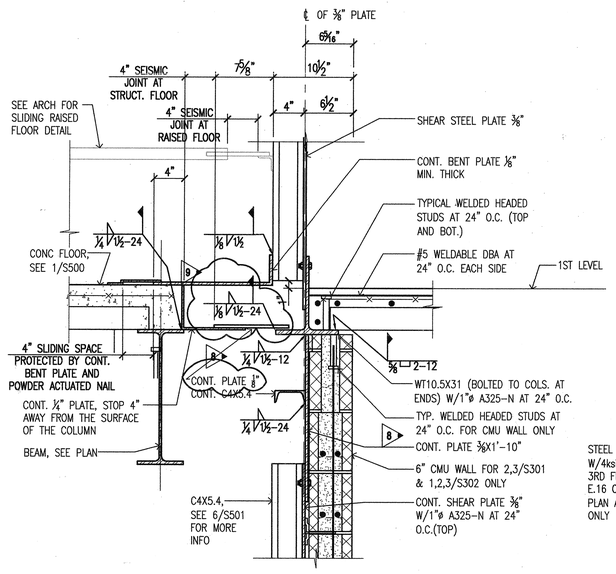

5 SHEAR WALL DETAIL

SCALE: 1½"=1'-0"

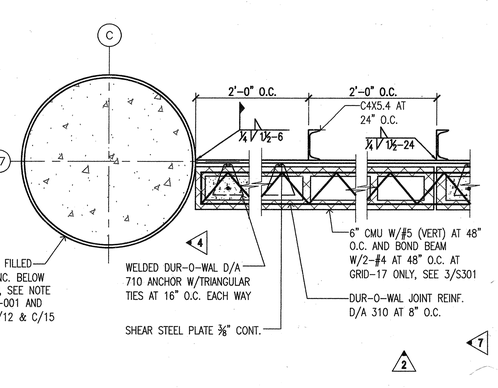

6 SHEAR WALL PLAN DETAIL AT COLUMN

SCALE: ¾"=1'-0"

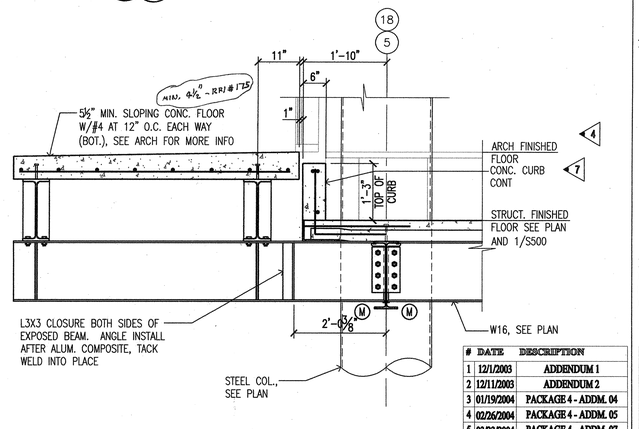

7 SECTION AT GRID LINES 5 AND 18 BALCONY

SCALE: ¾"=1'-0"

4 NOT USED

SCALE: 1" = 1'-0"

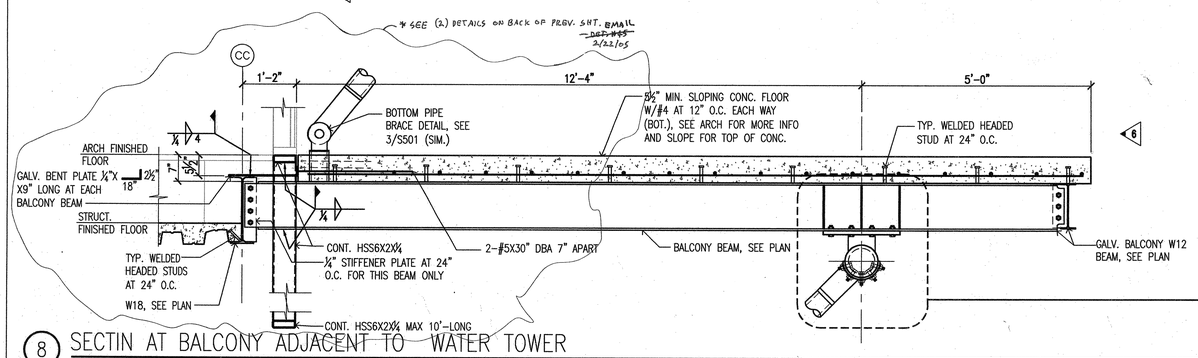

8 SECTIN AT BALCONY ADJACENT TO WATER TOWER

SCALE: ¾" = 1'-0"

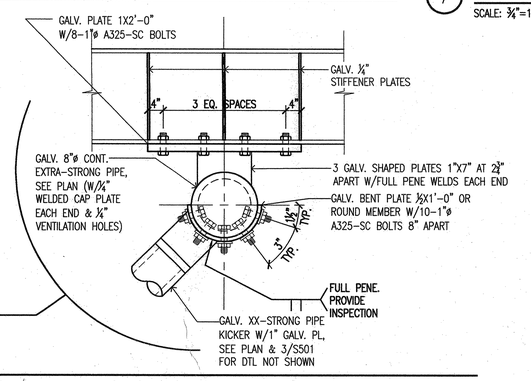

POLK STANLEY YEARY
ARCHITECTS, LTD.

700 SOUTH SCHILLER
LITTLE ROCK, AR 72201
501 378-0878
FAX 372-7629

21 W. MOUNTAIN, SUITE 227
FAYETTEVILLE, AR 72701
479-444-0473

CONSULTANTS:

OWNER'S PROJECT ADVISOR:
MOSES TUCKER REAL ESTATE, INC.

CIVIL ENGINEER:
McCLELLAND ENGINEERS

LANDSCAPE ARCHITECT:
LARSON BURNS SMITH

STRUCTURAL ENGINEER:
CROMWELL ENGINEERS INC.

MECH., ELEC., PLUMB. ENGINEER:
CROMWELL ENGINEERS INC.

SUSTAINABLE CONSULTANT:
BNIM / ELEMENTS

GLOBAL VILLAGE CONSULTANT
CAMBRIDGE SEVEN ASSOCIATES

INTERIOR DESIGNER:
POLK STANLEY YEARY

GENERAL CONTRACTOR:
CDI

GENERAL NOTES:

NOTES:

ISSUE DATE:
NOVEMBER 17, 2003
STRUCTURAL/FOUNDATION PACKAGE #4

REVISIONS:

#	DATE	DESCRIPTION
1	12/1/2003	ADDENDUM 1
2	12/11/2003	ADDENDUM 2
3	01/19/2004	PACKAGE 4 - ADDM. 04
4	02/26/2004	PACKAGE 4 - ADDM. 05
5	03/23/2004	PACKAGE 4 - ADDM. 07
6	04/13/2004	PACKAGE 4 - ADDM. 09
7	06/1/2004	ASI #2
8	08/26/2004	ASI #17
9	09/28/2004	ASI #19

HEIFER INTERNATIONAL CENTER OFFICE BUILDING

LITTLE ROCK, ARKANSAS

PSY PROJECT NUMBER:
431C

CONTENTS:
FLOOR FRAMING DETAILS

SHEET NUMBER:
S501