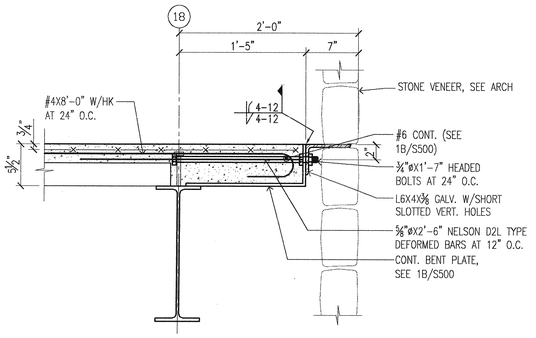

2 SECTION
SCALE: 1 1/2"=1'-0" (REF. 4/A435)

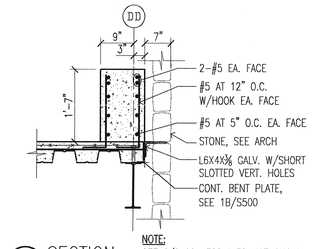

NOTE:
SEE 2/S102a FOR INFO NOT SHOWN

3 SECTION
SCALE: 3/4"=1'-0" (REF. 3/A601C)

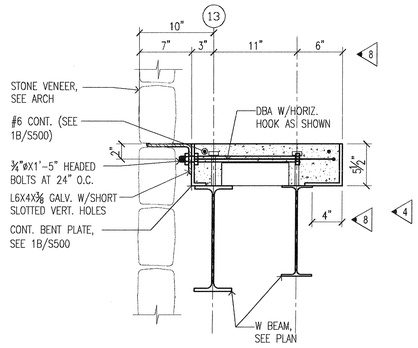

4 SECTION
SCALE: 1 1/2"=1'-0" (REF. 4/A601C)

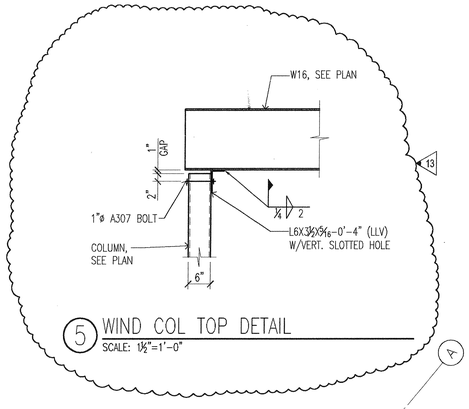

5 WIND COL TOP DETAIL
SCALE: 1 1/2"=1'-0"

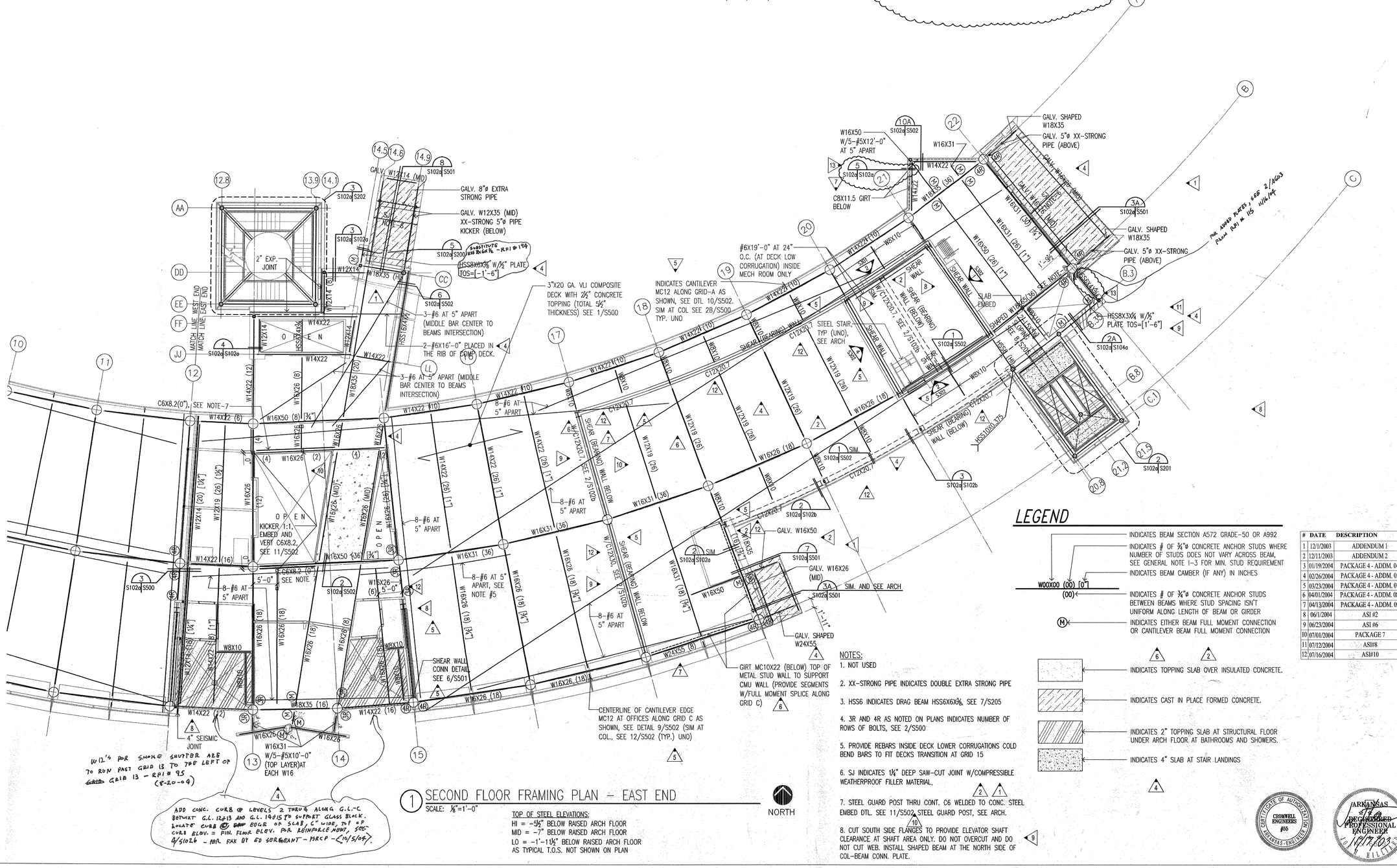

1 SECOND FLOOR FRAMING PLAN - EAST END
SCALE: 1/8"=1'-0"

NORTH

TOP OF STEEL ELEVATIONS:
HI = -5 1/2" BELOW RAISED ARCH FLOOR
MID = -7" BELOW RAISED ARCH FLOOR
LO = -1'-1 1/2" BELOW RAISED ARCH FLOOR
AS TYPICAL T.O.S. NOT SHOWN ON PLAN

NOTES:
1. NOT USED
2. XX-STRONG PIPE INDICATES DOUBLE EXTRA STRONG PIPE
3. HSS6 INDICATES DRAG BEAM HSS6X6X3/8, SEE 7/S205
4. 3R AND 4R AS NOTED ON PLANS INDICATES NUMBER OF ROWS OF BOLTS, SEE 2/S500
5. PROVIDE REBARS INSIDE DECK LOWER CORRUGATIONS COLD BEND BARS TO FIT DECKS TRANSITION AT GRID 15
6. SJ INDICATES 1 1/4" DEEP SAW-CUT JOINT W/COMPRESSIBLE WEATHERPROOF FILLER MATERIAL.
7. STEEL GUARD POST THRU CONT. C6 WELDED TO CONC. STEEL EMBED DTL. SEE 11/S502, STEEL GUARD POST, SEE ARCH.
8. CUT SOUTH SIDE FLANGES TO PROVIDE ELEVATOR SHAFT CLEARANCE AT SHAFT AREA ONLY. DO NOT OVERCUT AND DO NOT CUT WEB. INSTALL SHAPED BEAM AT THE NORTH SIDE OF COL-BEAM CONN. PLATE.

LEGEND

- INDICATES BEAM SECTION A572 GRADE-50 OR A992
- INDICATES # OF 3/4"ø CONCRETE ANCHOR STUDS WHERE NUMBER OF STUDS DOES NOT VARY ACROSS BEAM, SEE GENERAL NOTE 1-3 FOR MIN. STUD REQUIREMENT
- INDICATES BEAM CAMBER (IF ANY) IN INCHES
- W00X00 (00) [0"] / (00): INDICATES # OF 3/4"ø CONCRETE ANCHOR STUDS BETWEEN BEAMS WHERE STUD SPACING ISN'T UNIFORM ALONG LENGTH OF BEAM OR GIRDER
- (M): INDICATES EITHER BEAM FULL MOMENT CONNECTION OR CANTILEVER BEAM FULL MOMENT CONNECTION
- INDICATES TOPPING SLAB OVER INSULATED CONCRETE.
- INDICATES CAST IN PLACE FORMED CONCRETE.
- INDICATES 2" TOPPING SLAB AT STRUCTURAL FLOOR UNDER ARCH FLOOR AT BATHROOMS AND SHOWERS.
- INDICATES 4" SLAB AT STAIR LANDINGS

#	DATE	DESCRIPTION
1	12/1/2003	ADDENDUM 1
2	12/11/2003	ADDENDUM 2
3	01/19/2004	PACKAGE 4 - ADDM. 04
4	02/26/2004	PACKAGE 4 - ADDM. 05
5	03/23/2004	PACKAGE 4 - ADDM. 07
6	04/01/2004	PACKAGE 4 - ADDM. 08
7	04/13/2004	PACKAGE 4 - ADDM. 09
8	06/1/2004	ASI #2
9	06/23/2004	ASI #6
10	07/01/2004	PACKAGE 7
11	07/12/2004	ASI#8
12	07/16/2004	ASI#10

#	DATE	DESCRIPTION
13	08/26/2004	ASI #17

POLK STANLEY YEARY ARCHITECTS, LTD.

700 SOUTH SCHILLER
LITTLE ROCK, AR 72201
501 378-0878
FAX 372-7629

21 W. MOUNTAIN, SUITE 227
FAYETTEVILLE, AR 72701
479-444-0473

CONSULTANTS:

OWNER'S PROJECT ADVISOR:
MOSES TUCKER REAL ESTATE, INC.

CIVIL ENGINEER:
McCLELLAND ENGINEERS

LANDSCAPE ARCHITECT:
LARSON BURNS SMITH

STRUCTURAL ENGINEER:
CROMWELL ENGINEERS INC.

MECH., ELEC., PLUMB. ENGINEER:
CROMWELL ENGINEERS INC.

SUSTAINABLE CONSULTANT:
BNIM / ELEMENTS

GLOBAL VILLAGE CONSULTANT
CAMBRIDGE SEVEN ASSOCIATES

INTERIOR DESIGNER:
POLK STANLEY YEARY

GENERAL CONTRACTOR:
CDI

GENERAL NOTES:

NOTES:

ISSUE DATE:
NOVEMBER 17, 2003
STRUCTURAL/FOUNDATION PACKAGE #4

REVISIONS:

HEIFER INTERNATIONAL CENTER OFFICE BUILDING

LITTLE ROCK, ARKANSAS

PSY PROJECT NUMBER:
431C

CONTENTS:

SHEET NUMBER:
S102a

CERTIFICATE OF AUTHORITY
CROMWELL ENGINEERS #50
ARKANSAS ENGINEER

ARKANSAS
REGISTERED PROFESSIONAL ENGINEER
11/17/03

F:\Projects\2001\2001_066\2001066dwg\S102a.dwg, 08/27/2004 9:51:23 AM