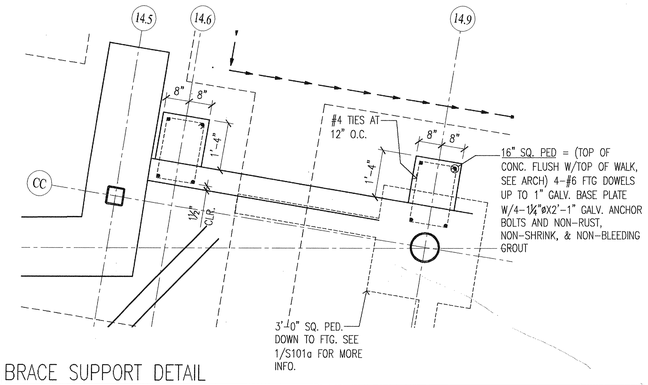

2 BRACE SUPPORT DETAIL
SCALE: NOT TO SCALE

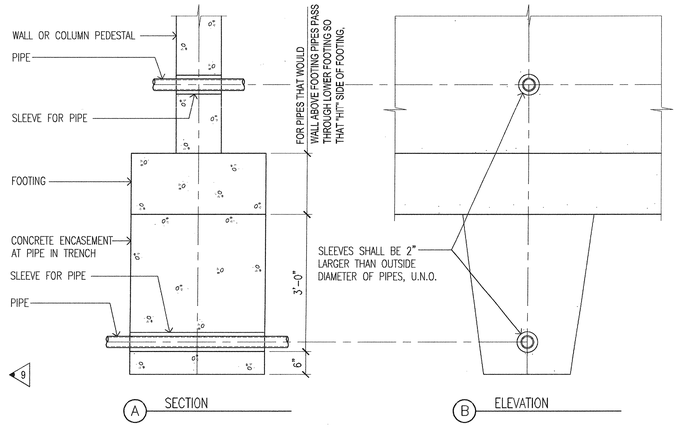

3 TRENCH EXCAVATION PERPENDICULAR TO FOOTINGS
SCALE: ¾"=1'-0"

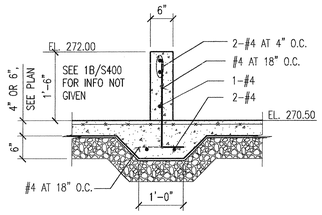

4 SECTION AT CONC. STEM WALL
SCALE: ¾"=1'-0"

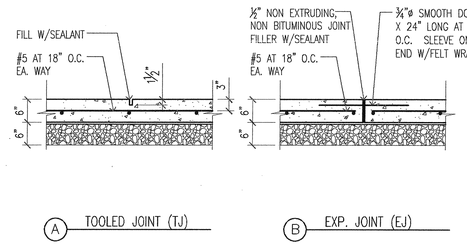

5 TYP WALKWAY SLAB CONSTRUCTION
SCALE: ¾"=1'-0"

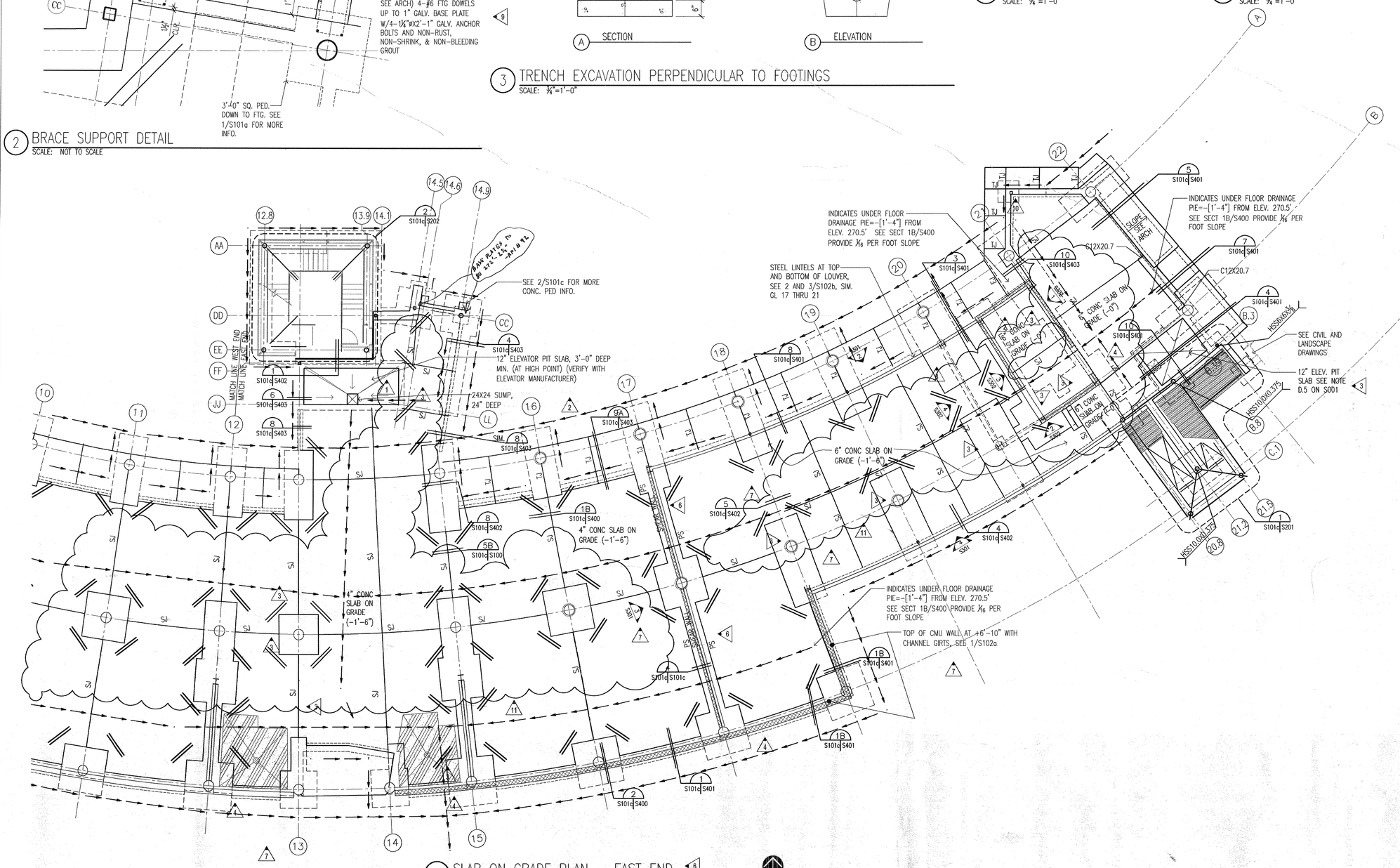

1 SLAB ON GRADE PLAN - EAST END
SCALE: ⅛"=1'-0"

NORTH

1. SEE SH. S002 FOR PLAN SHOWING SLAB ELEV'S AND THICKNESS
2. SEE SH. G003 AND ARCH PLANS FOR DIMS NOT GIVEN
3. ANY PARTITION CMU WALL NOT SHOWN ON THICKENED SLAB SHALL USE DETAIL 3/S101C (TYP.) UNO

TOP OF STEEL ELEVATIONS:
HI = -5½" BELOW RAISED ARCH FLOOR
MID = -7" BELOW RAISED ARCH FLOOR
LO = -1'-1½" BELOW RAISED ARCH FLOOR
AS TYPICAL T.O.S. NOT SHOWN ON PLAN

POLK STANLEY YEARY ARCHITECTS, LTD.

700 SOUTH SCHILLER
LITTLE ROCK, AR 72201
501 378-0878
FAX 372-7629

21 W. MOUNTAIN, SUITE 227
FAYETTEVILLE, AR 72701
479-444-0473

CONSULTANTS:

OWNER'S PROJECT ADVISOR:
MOSES TUCKER REAL ESTATE, INC.

CIVIL ENGINEER:
McCLELLAND ENGINEERS

LANDSCAPE ARCHITECT:
LARSON BURNS SMITH

STRUCTURAL ENGINEER:
CROMWELL ENGINEERS INC.

MECH., ELEC., PLUMB. ENGINEER:
CROMWELL ENGINEERS INC.

SUSTAINABLE CONSULTANT:
BNIM / ELEMENTS

GLOBAL VILLAGE CONSULTANT
CAMBRIDGE SEVEN ASSOCIATES

INTERIOR DESIGNER:
POLK STANLEY YEARY

GENERAL CONTRACTOR:
CDI

GENERAL NOTES:

NOTES:

ISSUE DATE:
NOVEMBER 17, 2003
STRUCTURAL/FOUNDATION
PACKAGE #4

REVISIONS:

#	DATE	DESCRIPTION
1	12/1/2003	ADDENDUM 1
2	12/11/2003	ADDENDUM 2
3	01/19/2004	PACKAGE 4 - ADDM. 04
4	02/26/2004	PACKAGE 4 - ADDM. 05
5	03/17/2004	PACKAGE 4 - ADDM. 06
6	03/23/2004	PACKAGE 4 - ADDM. 07
7	04/01/2004	PACKAGE 4 - ADDM. 08
8	04/13/2004	PACKAGE 4 - ADDM. 09
9	06/1/2004	ASI #2
10	06/23/2004	ASI #6
11	08/26/2004	ASI#17

HEIFER INTERNATIONAL CENTER OFFICE BUILDING

LITTLE ROCK, ARKANSAS

PSY PROJECT NUMBER:
431C

CONTENTS:
SLAB ON GRADE AND FIRST FLOOR FRAMING - EAST END

SHEET NUMBER:
S101c

CERTIFICATE OF AUTHORIZATION CROMWELL ENGINEERS #65 ARKANSAS ENGINEERS

ARKANSAS REGISTERED PROFESSIONAL ENGINEER 11/17/03