LEGEND

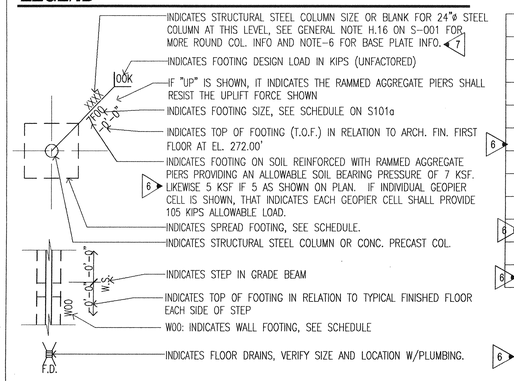

SQUARE FOOTING SCHEDULE

MARK	SIZE	DEPTH	REINF. (E.W. BOT.) TYP UNO	REMARKS
7F48	4'-0"	1'-0"	#5 AT 12" O.C.	---
7F72	6'-0"	1'-3"	#6 AT 12" O.C.	---
7F84	7'-0"	1'-9" MIN.	#6 AT 12" O.C. (TOP AND BOT.)	SEE NOTE #4
7F96	8'-0"	2'-0"	#6 AT 6" O.C. (TOP AND BOT.)	---
7F102	8'-6"	1'-9" MIN.	#6 AT 12" O.C.	SEE NOTE #4
7F108	9'-0"	2'-0"	#6 AT 6" O.C. (TOP AND BOT.)	---
5F120	10'-0"	1'-9" MIN.	#6 AT 12" O.C. (TOP AND BOT.)	SEE NOTE #4
5F126	10'-6"	2'-0"	#6 AT 12" O.C.	---
5F132	11'-0"	2'-0"	#6 AT 12" O.C.	---

RECTANGULAR FOOTING SCHEDULE

MARK	SIZE	DEPTH	REINFORCEMENT	REMARKS
7W36	3'-0" WIDE CONT.	1'-0"	4-#9 LONG (TOP) #5 (BOT.) AT 12" O.C. E.W.	
W42\7W42	3'-6" WIDE CONT.	1'-9"	SEE 1/S402	GEOPIERS FOR W42, SEE 1/S402
7F13272	11'-0"X6'-0"	2'-0"	#6 LONG AT 6" O.C. (T&B) #5 TRANSVERSE AT 12" O.C. (STIRRUPS)	
7F15666	13'-0"X5'-6"	2'-0"	#6 LONG AT 6" O.C. (T&B) #5 TRANSVERSE AT 12" O.C. (STIRRUPS)	
7F15690	13'-0"X7'-6"	2'-0"	#6 LONG AT 6" O.C. (T&B) #5 TRANSVERSE AT 12" O.C. (STIRRUPS)	
5F15678	13'-0"X6'-6"	2'-0"	#6 LONG AT 6" O.C. (T&B) #5 TRANSVERSE AT 12" O.C. (STIRRUPS)	
7F17472	14'-6"X6'-0"	2'-0"	#6 LONG AT 12" O.C. (T&B) #5 TRANSVERSE AT 12" O.C. (STIRRUPS)	
7F19872	16'-6"X6'-0"	2'-0"	#6 LONG AT 6" O.C. (T&B) #5 TRANSVERSE AT 6" O.C. (STIRRUPS)	
7F19296	16'-0"X8'-0"	2'-0"	#6 LONG AT 6" O.C. (T&B) #5 TRANSVERSE AT 12" O.C. (STIRRUPS)	
5F19878/ 7F19878	16'-6"X6'-6"	2'-0"	#6 LONG AT 6" O.C. (T&B) #5 TRANSVERSE AT 6" O.C. (STIRRUPS)	
7F21696	18'-0"X8'-0"	3'-0"	#9 LONG AT 6" O.C. (T&B) #5 TRANSVERSE AT 4" O.C. (STIRRUPS)	

NOTE:
1. PROVIDE 8-#9 VERT. W/#4 TIES AT 16" O.C. AT ALL 3'-0" SQ. PEDESTALS
2. ALL FOOTINGS WITHOUT TOP REINF. AND W/WF COL. AND 24"ø COL SHALL HAVE EXTRA 4-#6XLENGTH (=FTG. DIM.) AT MID-HT ADJACENT TO ANCHOR RODS. SEE 3/S400 FOR MORE INFO.
3. NOT USED
4. SEE SECTION 2/S400 AND PLANS FOR MORE INFO.
5. BASE PLATE 1½X30X1'-1" W/6-1⅜"ø ANCHOR RODS
6. FOR INTERIOR AND NON-SHEAR WALL END COLUMN: USE DETAIL 3/S400.
FOR SHEAR WALL END COLUMN: USE DETAIL 2/S402.
FOR SPECIAL SHEAR WALL END COLUMN: SEE COLUMN NOTES ON PLAN AT C/12, 15. & B.4/12, B.4/15

NOTE: GALV. ALL STEEL IN COOLING TOWER SUPPORT FRAME EXPOSED TO WEATHER

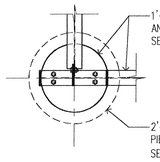

2 COOLING TOWER COL. PLAN DETAIL
SCALE: ¾"=1'-0"

NOTE:
SEE MECH, ARCH, AND CIVIL FOR THE PLAN AND LOCATION OF MECH YARD.

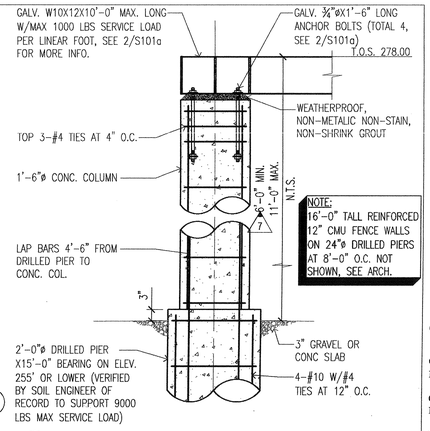

NOTE:
16'-0" TALL REINFORCED 12" CMU FENCE WALLS ON 24"ø DRILLED PIERS AT 8'-0" O.C. NOT SHOWN, SEE ARCH.

3 SECTION AT COOLING TOWER COLUMN
SCALE: ¾"=1'-0"

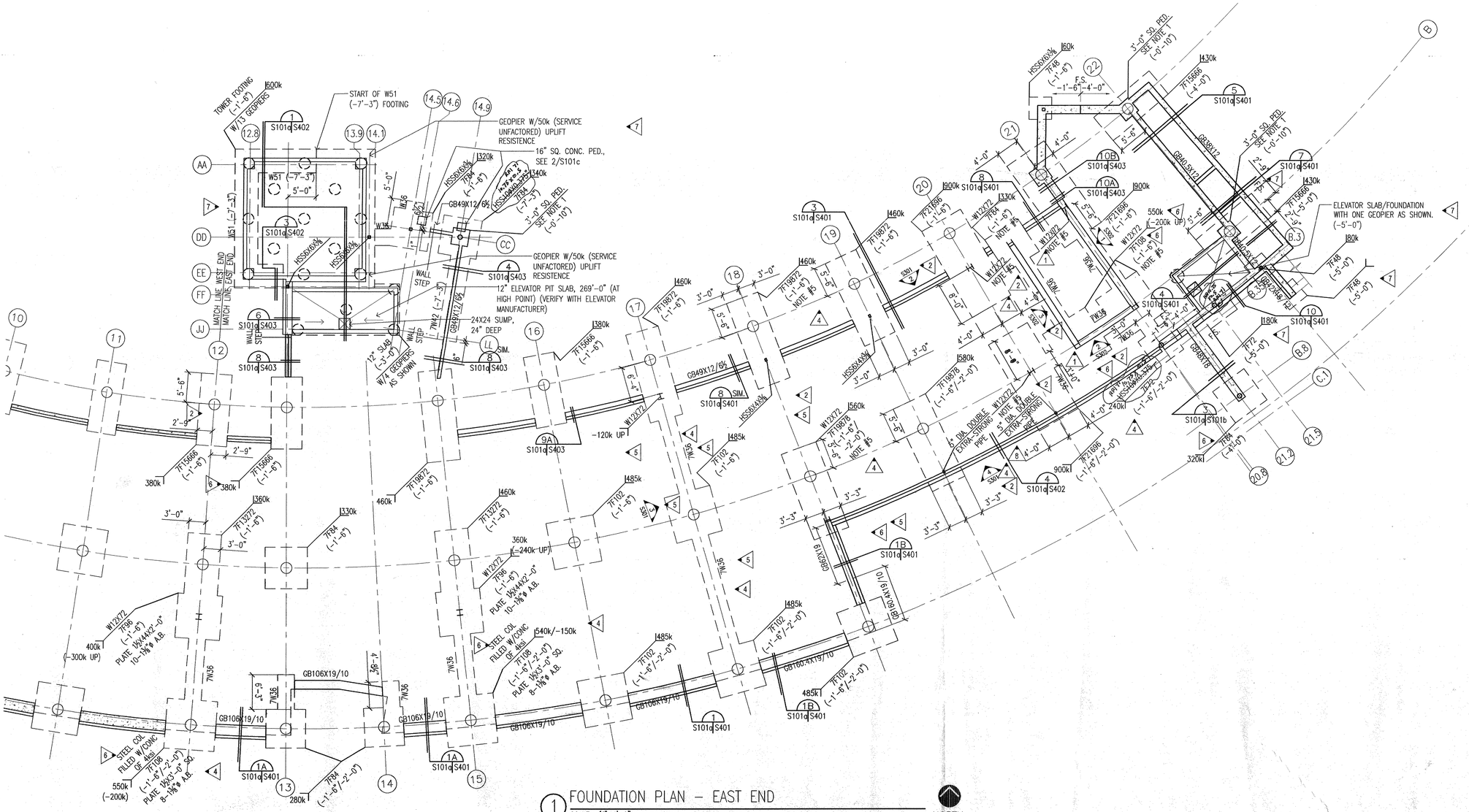

1 FOUNDATION PLAN – EAST END
SCALE: ⅛"=1'-0"

1. NOT USED
2. SEE SHEET G003 AND ARCH PLANS FOR DIM'S NOT GIVEN.

POLK STANLEY YEARY ARCHITECTS, LTD.

700 SOUTH SCHILLER
LITTLE ROCK, AR 72201
501 378-0878
FAX 372-7629

21 W. MOUNTAIN, SUITE 227
FAYETTEVILLE, AR 72701
479-444-0473

CONSULTANTS:

OWNER'S PROJECT ADVISOR:
MOSES TUCKER REAL ESTATE, INC.

CIVIL ENGINEER:
McCLELLAND ENGINEERS

LANDSCAPE ARCHITECT:
LARSON BURNS SMITH

STRUCTURAL ENGINEER:
CROMWELL ENGINEERS INC.

MECH., ELEC., PLUMB. ENGINEER:
CROMWELL ENGINEERS INC.

SUSTAINABLE CONSULTANT:
BNIM / ELEMENTS

GLOBAL VILLAGE CONSULTANT
CAMBRIDGE SEVEN ASSOCIATES

INTERIOR DESIGNER:
POLK STANLEY YEARY

GENERAL CONTRACTOR:
CDI

GENERAL NOTES:

NOTES:

ISSUE DATE:
NOVEMBER 17, 2003
STRUCTURAL/FOUNDATION PACKAGE #4

REVISIONS:

#	DATE	DESCRIPTION
1	12/11/2003	ADDENDUM 2
2	01/19/2004	PACKAGE 4 - ADDM. 04
3	03/17/2004	PACKAGE 4 - ADDM. 06
4	03/23/2004	PACKAGE 4 - ADDM. 07
5	04/01/2004	PACKAGE 4 - ADDM. 08
6	04/13/2004	PACKAGE 4 - ADDM. 09
7	06/1/2004	ASI #2
8	06/23/2004	ASI #6

HEIFER INTERNATIONAL CENTER OFFICE BUILDING

LITTLE ROCK, ARKANSAS

PSY PROJECT NUMBER:
431C

CERTIFICATE OF AUTHORIZATION
CROMWELL ENGINEERS
#55
ARKANSAS ENGINEER

ARKANSAS
REGISTERED PROFESSIONAL ENGINEER
11/17/03

CONTENTS:
FOUNDATION PLAN - EAST END

SHEET NUMBER:
S101a