Air Handling Sequences of Operation

Zone Air Handling Units (AHU-1E&W, AHU-2E&W, AHU-3E&W, AHU-4E&W)

Fans

Air handling units shall start on a command from the operation schedule of the BAS, or on a loss of communication from the device providing BAS signals, or on a request from the override function of a zone thermostat, or manually from a start signal when the hand-off-auto selector is placed in the "hand " position. Start-stop pushbuttons or a similar method shall provide the start signal. It shall not automatically start when the selector is placed in "hand." Status of "auto" or "not-in-auto" shall be reported to the BAS.

Air handling units shall stop whenever the emergency stop button is pressed; or on reaching any safety limit, until manually reset, i.e.: Mixed Air Temperatures (MAT) below 35F, duct static pressure greater than 5" water column, smoke detector alarm, duct relative humidity reaching 95%; or in "auto", if there is no command from the BAS or override request; or anytime the hand-off-auto selector is placed in the "off" position, or manually from a stop signal when the hand-off-auto selector is placed in the "hand " position. Start-stop pushbuttons or a similar method shall provide the stop signal.

Variable Frequency Drives

When the air handling unit is shut off the variable frequency drive (VFD) shall execute a speed ramp-down procedure to bring the fan to zero rpm and shut off, the chilled water valve shall close.

If the static pressure rises to 5.0", the smoke detector alarms, or the emergency stop button is pressed, the fan shall be immediately shut off without executing any rampdown sequence. The emergency stop button shall be hard wired to the VFD to accomplish its function and shall be a maintained contact device. Auxiliary contacts on the emergency stop button shall be used to supply emergency stop button status to the BAS.

When the air handling unit is running, airflow shall be proven by a method that proves that the fan is operating and will alarm on airflow loss in the event of motor, belt or bearing failure.

When the air-handling unit is started, the VFD shall start at 0 rpm, 0 hertz, and shall execute a speed ramp-up procedure to bring the fan to the required operating speed. The VFD shall skip any speed (s) that are shown to produce objectionable noise. The VFD shall control the fan speed to maintain an adjustable maximum static pressure setpoint. This setpoint shall be adjustable between 0.1 and 3.0 inches water column. The operating static pressure setpoint used to control fan speed shall be reset BAS on the demand of the terminals associated with the air-handling unit. The operating static pressure setpoint shall be that which has at least one terminal with an air valve open at 85% (adjustable) or greater and no terminal with an air valve open at 95 % (adjustable) or greater. The operating static pressure setpoint shall not be reset any higher than the maximum static pressure setpoint. The static pressure sensor shall be located in the supply air highway of the unit. Coordinate actual location with Engineer.

Filters

Each filter bank, pre-filter or final filter, shall have a differential pressure measurement made to determine filter loading. When pressure drop across the filter bank reaches the pre-set setpoint (adjustable), an alarm shall be generated indicating the location of the dirty filters.

Cooling Coil

The chilled water-cooling coil shall be controlled by a modulating two-way valve to maintain the supply air setpoint (62F, adjustable).

Zone Air Handling Unit Ventilation Damper Control

The ventilation damper responds to several conditions. Apparent conflicts between controlling conditions shall always be resolved in favor of the condition requiring the most ventilation air.

The ventilation damper shall be closed if the ventilation air handling unit shuts down.

Building Pressurization

The ventilation air damper shall be controlled to maintain the building pressurization setpoint of 0.04" wg (adjustable). During unoccupied periods the zone air handling units shall shut off, the return damper shall open, the ventilation units shall continue to run, and the outside air damper shall modulate to maintian the building pressure.

Carbon Dioxide

The ventilation air damper shall be controlled to maintain the level of carbon dioxide, as measured at any carbon dioxide sensor in the zone served by the air handling unit, at a value not more than 500 ppm (adjustable) above the level of carbon dioxide in the ventilation air. The carbon dioxide sensor in the assembly area on the fourth floor shall be satisfied at 1,000 PPM (adjustable) above the level of carbon dioxide in the ventilation air, provided the occupancy status is switched from "Normal" to "Large Meeting"; otherwise that sensor shall not be considered in ventilation control. The status switch shall be momentary contact and shall initiate a 3 hour hour (adjustable) period of use of the sensor. Status shall be indicated locally by a LED of green for "Normal" and Red for "Large Meeting".

Humidity

The ventilation air damper shall provide additional ventilation air to offset a rise of 3% (adjustable), or more, in space relative humidity, as measured at any relative humidity sensor in the zone served by the air handling unit, above the space relative humidity setpoint of 50% (adjustable), provided that the cooling coil leaving air temperature of the ventilation unit is at design setpoint of 47.0 F db (adjustable).

Ventilation air handling units

Fans

Ventilation air handling units shall start on a command from the operation schedule of the BAS, or on a loss of communication from the device providing BAS signals, or whenever one of its associated air handling units starts, or manually from a start signal when the hand-off-auto selector is placed in the "hand " position. Start-stop pushbuttons or a similar method shall provide the start signal. It shall not automatically start when the selector is placed in "hand." Status of "auto" or "not-in-auto" shall be reported to the BAS.

Air handling units shall stop whenever the emergency stop button is pressed; or on reaching any safety limit, until manually reset, i.e.: supply air temperature below 35F leaving preheat coil, duct static pressure greater than 5" water column, smoke detector alarm, duct relative humidity reaching 95%; or in "auto", if there is no command from the BAS or override request; or anytime the hand-off-auto selector is placed in the "off" position, or manually from a stop signal when the hand-off-auto selector is placed in the "hand " position. Start-stop pushbuttons or a similar method shall provide the stop signal.

Variable Frequency Drives

When the air handling unit is shut off the variable frequency drive (VFD) shall execute a speed ramp-down procedure to bring the fan to zero rpm and shut off. The outside air damper shall tightly close; the hot and chilled water valves shall close.

If the static pressure rises to 5.0", the smoke detector alarms, or the emergency stop button is pressed, the fan shall be immediately shut off without executing any rampdown sequence. The emergency stop button shall be hard wired to the VFD to accomplish its function and shall be a maintained contact device. Auxiliary contacts on the emergency stop button shall be used to supply emergency stop button status to the BAS.

When the air handling unit is running, airflow shall be proven by a method that proves that the fan is operating and will alarm on airflow loss in the event of motor, belt or bearing failure.

When the air-handling unit is started, the VFD shall start at 0 rpm, 0 hertz, and shall execute a speed ramp-up procedure to bring the fan to the required operating speed. The VFD shall skip any speed (s) that are shown to produce objectionable noise. The VFD shall control the fan speed to maintain an adjustable maximum static pressure setpoint. This setpoint shall be adjustable between 0.1 and 3.0 inches water column. The operating static pressure setpoint used to control fan speed shall be reset BAS on the demand of the ventilation dampers of the air-handling units associated with the ventilation unit. The operating static pressure setpoint shall be that which has at least one air-handling unit ventilation damper open at 85% (adjustable) or greater and no air-handling unit ventilation damper open at 95% (adjustable) or greater. The operating static pressure setpoint shall not be reset any higher than the maximum static pressure setpoint. The static pressure sensor shall be located in the fan plenum of the unit. Coorinate actual location with Engineer.

Damper

When the air-handling unit is running, the outside air damper shall be 100% open.

Filters

Each filter bank, shall have a differential pressure measurement made to determine filter loading. When pressure drop across the filter bank reaches the pre-set setpoint (adjustable), an alarm shall be generated indicating the location of the dirty filters.

Preheat Coil

The hot water preheat coil shall be equipped with a two-position two-way valve . The valve shall be open whenever the outside temperature is 50F or less. The integral face and bypass dampers shall be modulated to provide a leaving mixed air temperature of 47F. Temperature sensor shall be Platinum RTD averaging type.

Cooling Coil

The chilled water-cooling coil shall be controlled by a modulating two-way valve to maintain the supply air setpoint (47F, adjustable). Temperature sensor shall be Platinum RTD averaging type.

If the space relative humidity, as measured by every relative humidity sensor in the zones served by the ventilation unit, is below the space relative humidity setpoint of 50% (adjustable) by 3% or more, the leaving air temperature setpoint for the cooling coil shall be rest upward one degree every five minutes until any relative humidity sensor in the zones served by the ventilation unit reaches the space relative humidity setpoint of 50% or the setpoint of the cooling coil leaving air temperature reaches 62F (adjustable).

If the space relative humidity, as measured by any relative humidity sensor in the zones served by the ventilation unit, is above the space relative humidity setpoint of 50% (adjustable) by 3% (adjustable), or more, the leaving air temperature setpoint for the cooling coil shall be rest downward one degree every five minutes until either no relative humidity sensor is 3% (adjustable) or more above the setpoint of 50% (adjustable) or the setpoint of the cooling coil leaving air temperature reaches 47F(adjustable).

Reheat Coil

The hot water re-heat coil shall be modulated to maintain a minimum mixed air temperature of 62F at each of the zone air handling units served by the ventilation unit. Temperature sensor shall be Platinum RTD averaging type.

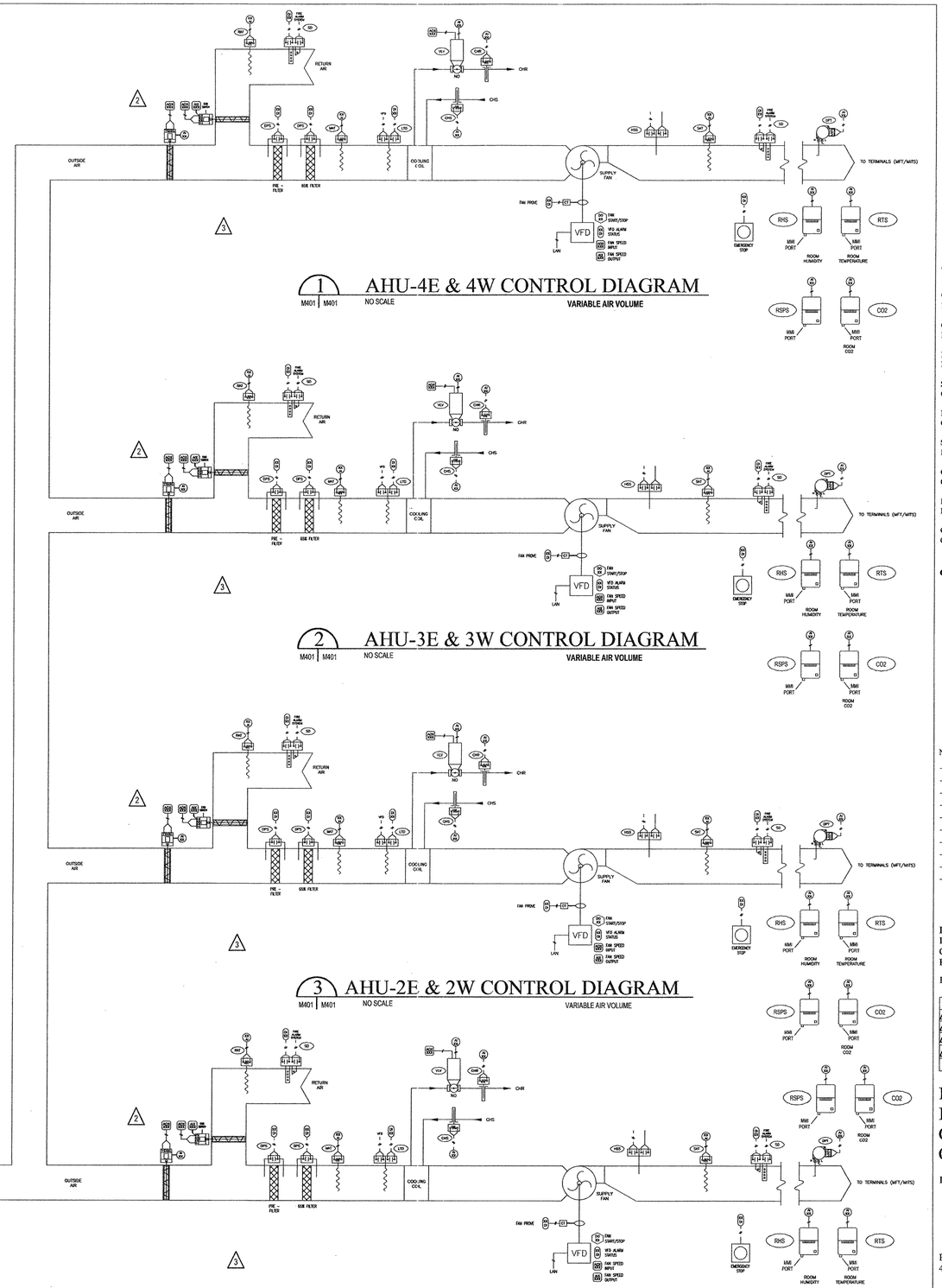

1 AHU-4E & 4W CONTROL DIAGRAM
M401 | M401 NO SCALE VARIABLE AIR VOLUME

2 AHU-3E & 3W CONTROL DIAGRAM
M401 | M401 NO SCALE VARIABLE AIR VOLUME

3 AHU-2E & 2W CONTROL DIAGRAM
M401 | M401 NO SCALE VARIABLE AIR VOLUME

4 AHU-1E & 1W CONTROL DIAGRAM
M401 | M401 NO SCALE VARIABLE AIR VOLUME

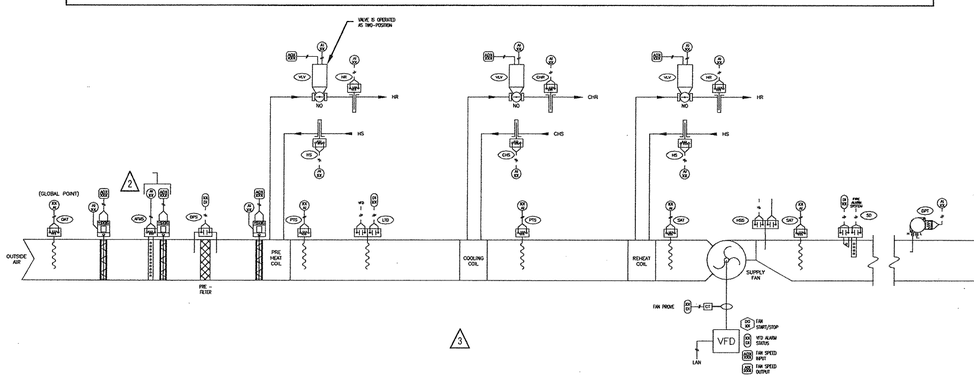

5 VU-E & W CONTROL DIAGRAM
M401 | M401 NO SCALE VARIABLE AIR VOLUME

POLK STANLEY YEARY ARCHITECTS, LTD.

700 SOUTH SCHILLER
LITTLE ROCK, AR 72201
501 378-0878
FAX 372-7629

21 W. MOUNTAIN, SUITE 227
FAYETTEVILLE, AR 72701
479-444-0473

CONSULTANTS:

OWNER'S PROJECT ADVISOR:
MOSES TUCKER REAL ESTATE, INC.

CIVIL ENGINEER:
McCLELLAND ENGINEERS

LANDSCAPE ARCHITECT:
LARSON BURNS SMITH

STRUCTURAL ENGINEER:
CROMWELL ENGINEERS INC.

MECH., ELEC., PLUMB. ENGINEER:
CROMWELL ENGINEERS INC.

SUSTAINABLE CONSULTANT:
BNIM / ELEMENTS

GLOBAL VILLAGE CONSULTANT
CAMBRIDGE SEVEN ASSOCIATES

INTERIOR DESIGNER:
POLK STANLEY YEARY

GENERAL CONTRACTOR:
CDI

GENERAL NOTES:

NOTES:

ISSUE DATE:
DECEMBER 15, 2003
CORE/SHELL
PACKAGE #5

REVISIONS:

#	DATE	DESCRIPTION
1	1-16-04	ADDENDUM #1
1	1-23-04	PACKAGE 5-ADDM. 02
1	7-1-04	PACKAGE 7, 100% ROLL UP
1	11-29-04	ASI #27

HEIFER INTERNATIONAL CENTER OFFICE BUILDING

LITTLE ROCK, ARKANSAS

PSY PROJECT NUMBER:
431C

CONTENTS:
HVAC CONTROLS

SHEET NUMBER:
M401 3

CERTIFICATE OF AUTHORIZATION CROMWELL ENGINEERS #65 ENGINEERS - ENGINEER

STATE OF ARKANSAS REGISTERED PROFESSIONAL ENGINEER 12-15-03 No. 9408 TODD A. KORN