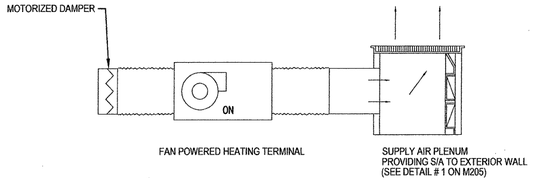

1 MODULAR FAN TERMINAL (MFT)
M-204 | M-204 NO SCALE

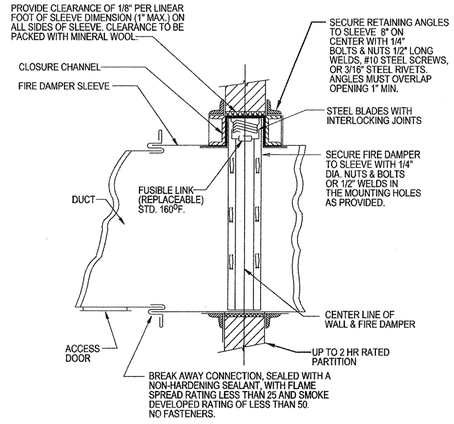

GENERAL NOTES:

1. DETAILS SHOWN ARE FOR COMBINATION FIRE SMOKE DAMPERS IN HORIZONTAL DUCTWORK. FOR DAMPERS IN VERTICAL DUCTWORK, DETAIL IS SIMILAR.
2. ACCESS DOOR IS SHOWN IN SIDE OF DUCT.
3. THIS DETAIL IS FOR GUIDE ONLY. INSTALL DAMPER IN ACCORDANCE WITH MANUFACTURERS RECOMMENDATIONS. MANUFACTURER'S INSTRUCTIONS TO COMPLY WITH UL LISTING.
4. FIRE DAMPERS TO BE LABELED IN ACCORDANCE WITH UL 555-1995.

2 SHUTTER TYPE SPRING LOADED FIRE DAMPER (1-1/2 HOUR RATING)
M-204 | M-204 NO SCALE

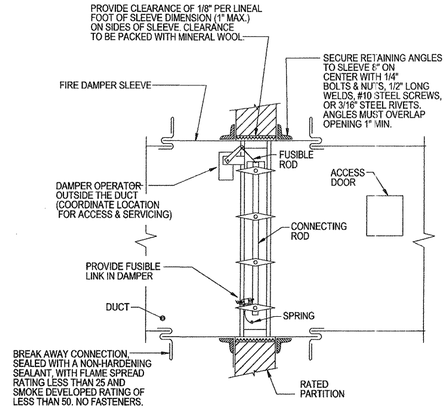

GENERAL NOTES:

1. DETAILS SHOWN ARE FOR COMBINATION FIRE SMOKE DAMPERS IN HORIZONTAL DUCTWORK. FOR DAMPERS IN VERTICAL DUCTWORK, DETAIL IS SIMILAR.
2. ACCESS DOOR IS SHOWN IN SIDE OF DUCT.
3. THIS DETAIL IS FOR GUIDE ONLY. INSTALL DAMPER IN ACCORDANCE WITH MANUFACTURERS RECOMMENDATIONS. MANUFACTURER'S INSTRUCTIONS TO COMPLY WITH UL LISTING.
4. FIRE DAMPERS TO BE LABELED IN ACCORDANCE WITH UL 555-1995.

3 COMBINATION FIRE AND SMOKE DAMPER WITH FUSIBLE LINK
M-204 | M-204 NO SCALE

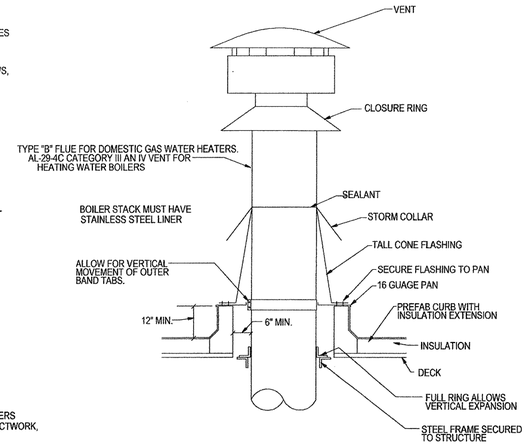

4 BOILER STACK DETAIL
M-204 | M-204 SCALE

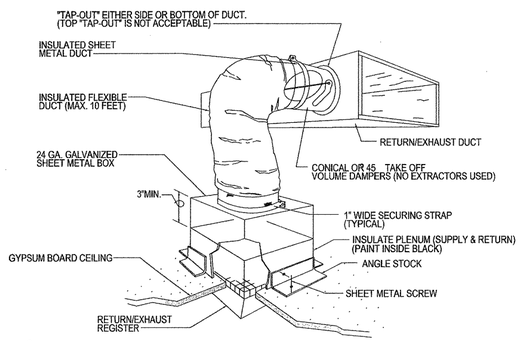

5 GRILLE CONNECTION AT GYPSUM BOARD CEILING
M-204 | M-204 NO SCALE

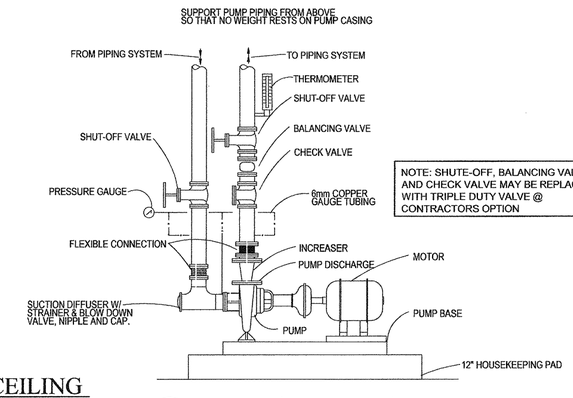

NOTE: SHUTE-OFF, BALANCING VALVE, AND CHECK VALVE MAY BE REPLACED WITH TRIPLE DUTY VALVE @ CONTRACTORS OPTION

6 END SUCTION PUMP
M-602 | M-602 SCALE

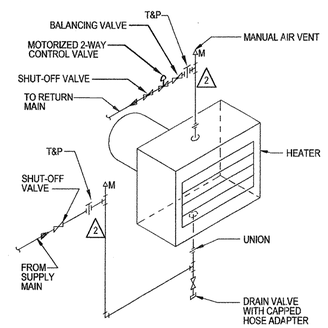

7 HOT WATER UNIT HEATER PIPING
M-204 | M-204 NO SCALE

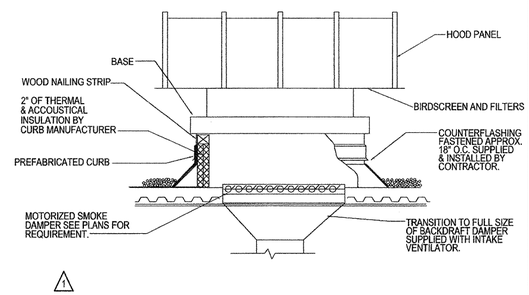

8 INTAKE VENTILATOR
M-204 | M-204 NO SCALE

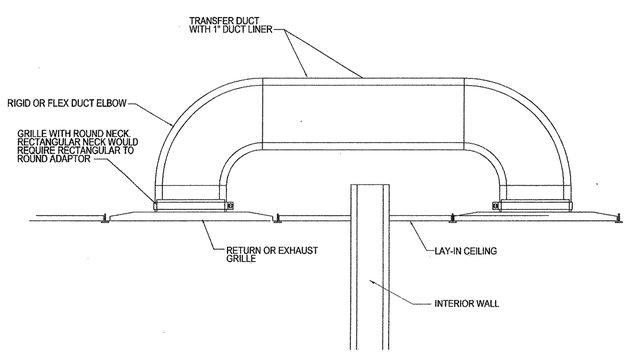

9 TYPICAL TRANSFER DUCT
M-204 | M-204 NO SCALE

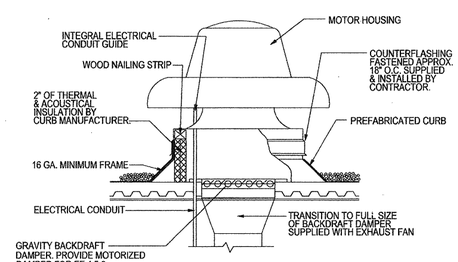

NOTE:

CURB, DISCONNECT SWITCH, BACKDRAFT DAMPER, INSULATION & SEAL STRIP SHALL BE PROVIDED BY FAN MANUFACTURER.

10 ROOF MOUNTED EXHAUST FAN
M-204 | M-204 NO SCALE

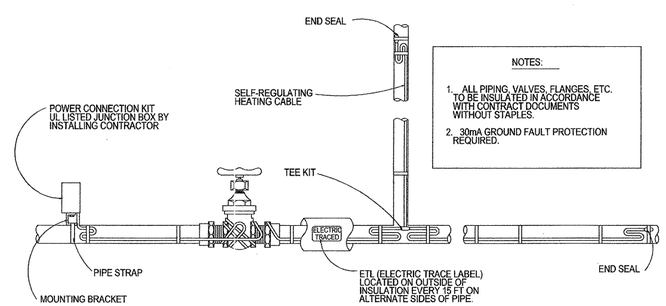

NOTES:

1. ALL PIPING, VALVES, FLANGES, ETC. TO BE INSULATED IN ACCORDANCE WITH CONTRACT DOCUMENTS WITHOUT STAPLES.
2. 30mA GROUND FAULT PROTECTION REQUIRED.

11 TYPICAL PIPING HEAT TRACE
M-204 | M-204 SCALE

CERTIFICATE OF AUTHORIZATION CROMWELL ENGINEERS #55 ARKANSAS - ENGINEERING

STATE OF ARKANSAS REGISTERED PROFESSIONAL ENGINEER 12-5-03 No. 9408 TODD A. KLAAN

POLK STANLEY YEARY
ARCHITECTS, LTD.

700 SOUTH SCHILLER
LITTLE ROCK, AR 72201
501 378-0878
FAX 372-7629

21 W. MOUNTAIN, SUITE 227
FAYETTEVILLE, AR 72701
479-444-0473

CONSULTANTS:

OWNER'S PROJECT ADVISOR:
MOSES TUCKER REAL ESTATE, INC.

CIVIL ENGINEER:
McCLELLAND ENGINEERS

LANDSCAPE ARCHITECT:
LARSON BURNS SMITH

STRUCTURAL ENGINEER:
CROMWELL ENGINEERS INC.

MECH., ELEC., PLUMB. ENGINEER:
CROMWELL ENGINEERS INC.

SUSTAINABLE CONSULTANT:
BNIM / ELEMENTS

GLOBAL VILLAGE CONSULTANT
CAMBRIDGE SEVEN ASSOCIATES

INTERIOR DESIGNER:
POLK STANLEY YEARY

GENERAL CONTRACTOR:
CDI

GENERAL NOTES:

NOTES:

ISSUE DATE:
DECEMBER 15, 2003
CORE/SHELL
PACKAGE #5

REVISIONS:

#	DATE	DESCRIPTION
1	1-16-04	ADDENDUM #1
1	1-23-04	PACKAGE 5-ADDM. 02
1	1-23-04	PACKAGE 7, 100% ROLL UP

HEIFER INTERNATIONAL CENTER OFFICE BUILDING

LITTLE ROCK, ARKANSAS

PSY PROJECT NUMBER:
431C

CONTENTS:
HVAC DETAILS

SHEET NUMBER:
M204