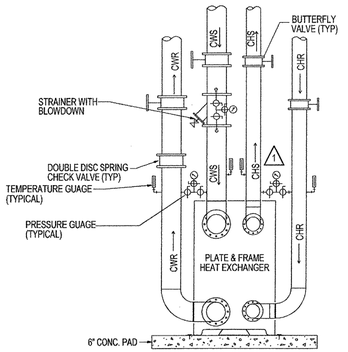

1 PLATE AND FRAME HEAT EXCHANGER PIPING DETAIL

M-202 | M-202 NO SCALE

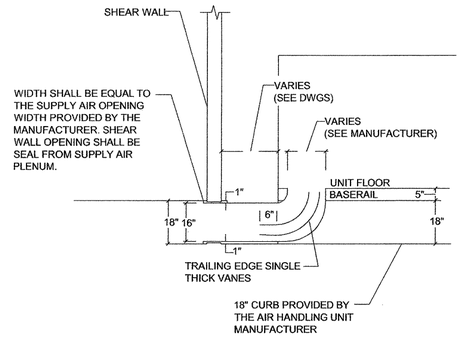

2 AIR HANDLING UNIT SECTION

M-202 | M-202 NO SCALE

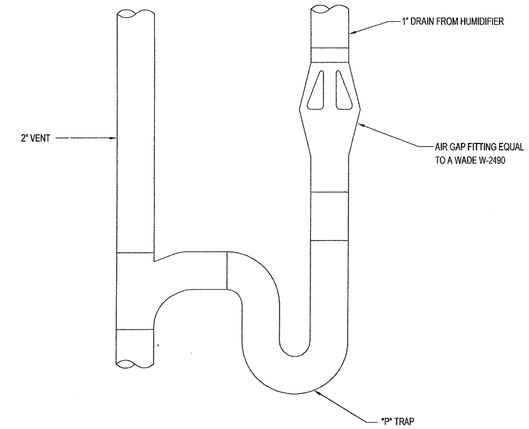

3 CONDENSATE DRAIN TRAP DETAIL

M-202 | M-202 NO SCALE

1

NOTE:

CURB, INSULATION & SEAL STRIP SHALL BE PROVIDED BY INTAKE VENTILATION MANUFACTURER.

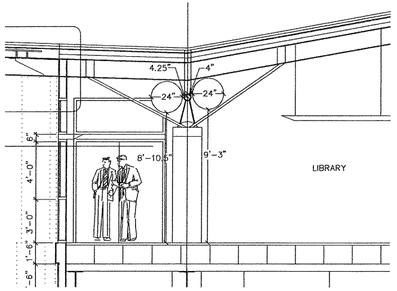

4 FOURTH FLOOR HVAC RETURN SECTION

M-202 | M-202 NO SCALE

1

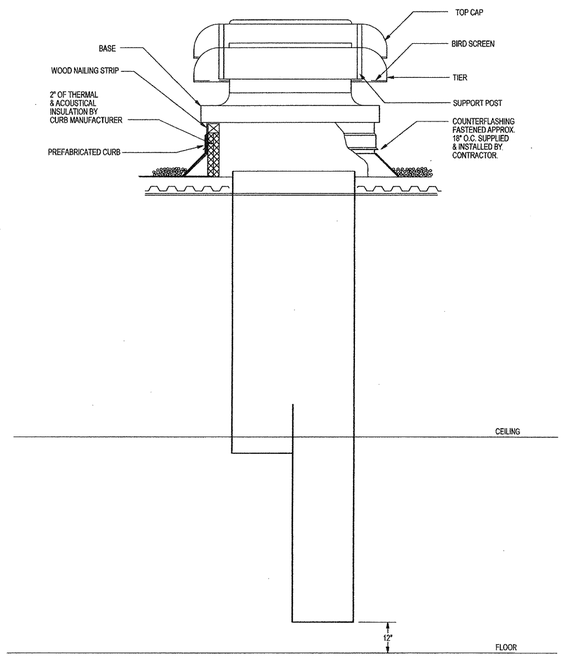

5 COMBUSTION INTAKE VENTILATOR

M-202 | M-202 NO SCALE

1

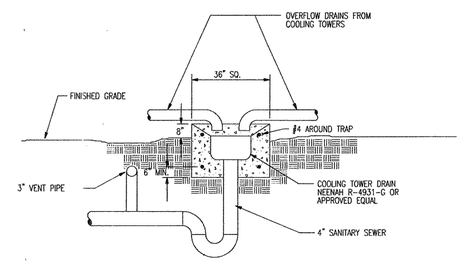

6 COOLING TOWER DRAIN

M-202 | M-202 NO SCALE

1

POLK STANLEY YEARY
ARCHITECTS, LTD.

700 SOUTH SCHILLER
LITTLE ROCK, AR 72201
501 378-0878
FAX 372-7629

21 W. MOUNTAIN, SUITE 227
FAYETTEVILLE, AR 72701
479-444-0473

CONSULTANTS:

OWNER'S PROJECT ADVISOR:
MOSES TUCKER REAL ESTATE, INC.

CIVIL ENGINEER:
McCLELLAND ENGINEERS

LANDSCAPE ARCHITECT:
LARSON BURNS SMITH

STRUCTURAL ENGINEER:
CROMWELL ENGINEERS INC.

MECH., ELEC., PLUMB. ENGINEER:
CROMWELL ENGINEERS INC.

SUSTAINABLE CONSULTANT:
BNIM / ELEMENTS

GLOBAL VILLAGE CONSULTANT
CAMBRIDGE SEVEN ASSOCIATES

INTERIOR DESIGNER:
POLK STANLEY YEARY

GENERAL CONTRACTOR:
CDI

GENERAL NOTES:

NOTES:

ISSUE DATE:
DECEMBER 15, 2003
CORE/SHELL
PACKAGE #5

REVISIONS:

#	DATE	DESCRIPTION
1	1-16-04	ADDENDUM #1
1	7-1-04	PACKAGE 7, 100% ROLL UP

HEIFER INTERNATIONAL CENTER OFFICE BUILDING

LITTLE ROCK, ARKANSAS

PSY PROJECT NUMBER:
431C

CONTENTS:
HVAC DETAILS

SHEET NUMBER:

M202

CERTIFICATE OF AUTHORIZATION CROMWELL ENGINEERS #55 ARKANSAS - ENGINEER

STATE OF ARKANSAS REGISTERED PROFESSIONAL ENGINEER 12-6-03 No. 9408 TODD A. KLAAN