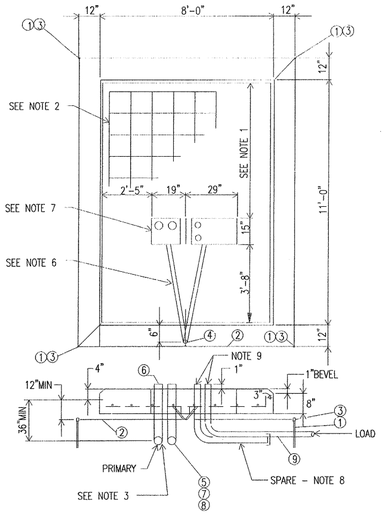

ITEM	DESCRIPTION(QUANTITY AS REQUIRED)
1	ROD, GROUND,3/4" X 10'-0"
2	CONDUCTOR, COPPER #1/0 BARE
3	CLAMP GROUND ROD
4	CONNECTOR, COMPRESSION #1/0 COPPER
5	ELBOW 90 °GALVANIZED
6	CONDUIT BUSHING
7	ADAPTER CONDUIT, GALVANIZED TO PVC
8	CONDUIT, PVC PLASTIC
9	CONDUIT, GALVANIZED RIGID STEEL

NOTES:

1. WHERE POSSIBLE DO NOT PLACE CONDUIT UNDER THIS SECTION OF FOUNDATION.

2. REINFORCING - #4 BARS 12" QC. BOTH WAYS.

3. WHEN INSTALLING CONDUIT DISTURB GROUND IN FOUNDATION AREA AS LITTLE AS POSSIBLE.

4. TOP OF FOUNDATION TO BE SMOOTH AND LEVEL. FINAL GRADE SHALL SLOPE AWAY FROM PAD.

5. CONCRETE SHALL BE 3500 PSI AT 28 DAYS.

6. CONTRACTOR TO FURNISH 1" CONDUIT UNDER PAD FOR GROUND WIRE.

7. OPENING SHALL BE PROVIDED FOR CONDUIT AS SHOWN. CONDUIT SHALL NOT BE CONCRETED IN. CONTRACTOR SHALL VERIFY DIMENSIONS OF OPENINGS.

8. STUB OUT 2'-0" BEYOND PAD AND CAP SPARE CONDUITS.

9. CONDUIT, GALVANIZED RIGID STEEL.

1 TRANSFORMER PAD

E501 | E401 NOT TO SCALE

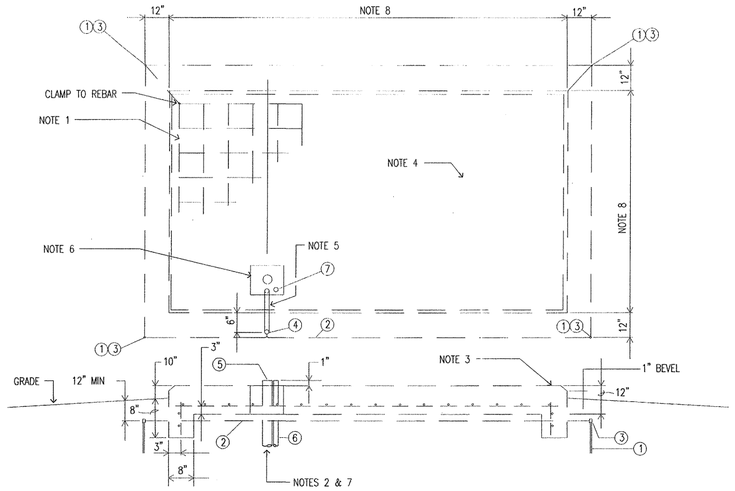

SECTIONAL VIEW

2 GENERATOR PAD

E501 | E401 NOT TO SCALE

ITEM:	DESCRIPTION
1	ROD, GROUND, 3/4" X 10'-0"
2	CONDUCTOR, COPPER #1/0 BARE
3	CLAMP GROUND ROD
4	CONNECTOR, COMPRESSION #1/0 COPPER
5	CONDUIT BUSHING
6	CONDUIT, 4" RGS

NOTES:

1. REINFORCING #4 BARS 12" C TO C BOTH WAYS.

2. WHEN INSTALLING CONDUIT DISTURB GROUND IN FOUNDATION AREA AS LITTLE AS POSSIBLE.

3. TOP OF FOUNDATION TO BE SMOOTH AND LEVEL. FINAL GRADE SHALL SLOPE AWAY FROM PAD.

4. CONCRETE SHALL BE 3500 PSI AT 28 DAYS.

5. CONTRACTOR TO FURNISH 1" CONDUIT UNDER PAD FOR GROUND WIRE.

6. OPENING SHALL BE PROVIDED FOR CONDUIT AS SHOWN. CONDUIT SHALL NOT BE CONCRETED IN. CONTRACTOR SHALL VERIFY DIMENSIONS OF OPENINGS AND REQUIRED LOCATIONS.

7. STUB OUT 2'-0" BEYOND PAD.

8. PAD TO BE 6" GREATER THAN GENERATOR/TANK HOUSING. (VERIFY WITH EQUIPMENT MANUFACTURER).

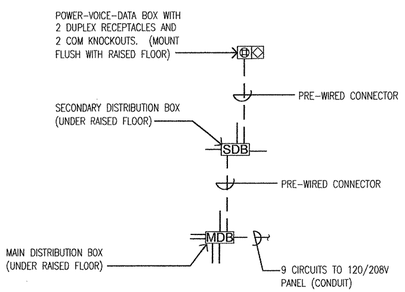

GENERAL NOTES:

1. PROVIDE 10% SPARE PRE-WIRED CONNECTORS OF EVERY LENGTH UTILIZED.

3 ACCESS FLOOR MODULAR WIRING SCHEMATIC

E401 | E401 NOT TO SCALE

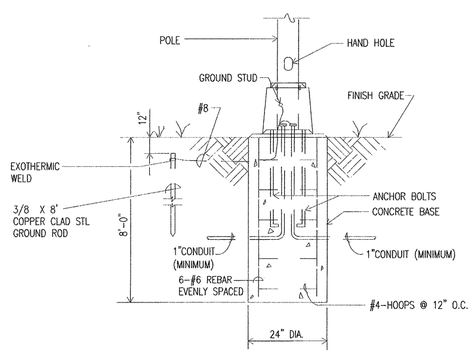

4 LIGHTING POLE BASE

E401 | E401 NOT TO SCALE

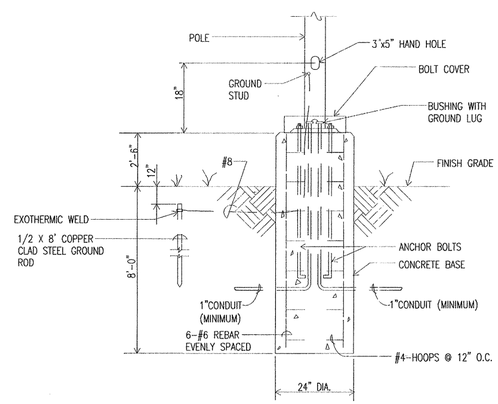

5 LIGHTING POLE BASE

E401 | E401 NOT TO SCALE

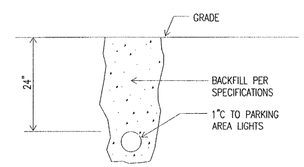

6 PARKING AREA UNDERGROUND RACEWAY

E401 | E401 NOT TO SCALE

POLK STANLEY YEARY
ARCHITECTS, LTD.

700 SOUTH SCHILLER
LITTLE ROCK, AR 72201
501 378-0878
FAX 372-7629

21 W. MOUNTAIN, SUITE 227
FAYETTEVILLE, AR 72701
479-444-0473

CONSULTANTS:

OWNER'S PROJECT ADVISOR:
MOSES TUCKER REAL ESTATE, INC.

CIVIL ENGINEER:
McCLELLAND ENGINEERS

LANDSCAPE ARCHITECT:
LARSON BURNS SMITH

STRUCTURAL ENGINEER:
CROMWELL ENGINEERS INC.

MECH., ELEC., PLUMB. ENGINEER:
CROMWELL ENGINEERS INC.

SUSTAINABLE CONSULTANT:
BNIM / ELEMENTS

GLOBAL VILLAGE CONSULTANT
CAMBRIDGE SEVEN ASSOCIATES

INTERIOR DESIGNER:
POLK STANLEY YEARY

GENERAL CONTRACTOR:
CDI

GENERAL NOTES:

NOTES:

ISSUE DATE:
DECEMBER 15, 2003
CORE/SHELL
PACKAGE #5

REVISIONS:

#	DATE	DESCRIPTION
	7/01/04	PACKAGE 7,100% ROLLUP

HEIFER INTERNATIONAL CENTER OFFICE BUILDING

LITTLE ROCK, ARKANSAS

PSY PROJECT NUMBER:
431C

CROMWELL ENGINEERS #65 — CERTIFICATE OF AUTHORIZATION — ARKANSAS - ENGINEER

STATE OF ARKANSAS — REGISTERED PROFESSIONAL ENGINEER No. 9401 — PAMELA S. FLYNN — 12/15/03

CONTENTS:
ELECTRICAL DETAILS

SHEET NUMBER:
E401